www.iwogroup.eu sales@iwogroup.eu tel.: +420 602 558 254

UZAMYKACÍ SYSTÉMY / LOCKING SYSTEMS

Locking technology for cold storage

Multi-functional locking system

7503

7501

7101

Cold storage latches

7800

6000

6004

Camlock

0270

Edge-mounted hinges

4514

4000/1

4510/11

Edge-mounted hinges

4002/3

4004

4006

7514

4010

7805

Hinges

4296

4297

5000

7902

Pinlock (gastight)

7150

Multiple pressing lever locking

7505

IWO group

FEEL THE SERVICE!

www.iwogroup.eu sales@iwogroup.eu tel.: +420 602 558 254

NEW!

Multi-functional locking system

Series 7503 | NITRO

NEW!

Locking technology for cold storage

Multi-functional locking system | Series 7503 | NITRO

- Modern turning lever latch for high standards
- Multiple latching variations by modular design
- Ideal for cold storage rooms
- Quick and easy assembly
- Integrated adaptation to varying door thickness tolerances
- To be used with right- and left-hinged doors
- Lockable and ready for master-key systems, KABA-Version available
- Diversity of keys available
- Standard door thicknesses 80 - 200 mm
- Material: Handle - stainless steel; Housing - plastic; Inner parts - stainless steel

Outside handle geared for the following door thicknesses:

door thickness	handle stainless steel / insert black
80 mm	Art.-Nr. 7503-020080
90 mm	Art.-Nr. 7503-020090
100 mm	Art.-Nr. 7503-020100
110 mm	Art.-Nr. 7503-020110
120 mm	Art.-Nr. 7503-020120
130 mm	Art.-Nr. 7503-020130
140 mm	Art.-Nr. 7503-020140
160 mm	Art.-Nr. 7503-020160
180 mm	Art.-Nr. 7503-020180
200 mm	Art.-Nr. 7503-020200

Angular press lever, multiple locking, M = 80 mm:

right hand Art.-Nr. 7500-020010
left hand Art.-Nr. 7500-020011

Angular press lever, multiple locking, M = 100 mm:

right hand Art.-Nr. 7500-020012
left hand Art.-Nr. 7500-020013

Variations of turning handle inside-openers:

Handle with catch lock, M = 80 mm:

Art.-Nr. 7503-020220

Press lever:

M = 80 mm:
Art.-Nr. 7503-020221

M = 100 mm:
Art.-Nr. 7501-020231

For doors opening to inside:

Art.-Nr. 7503-020235

Press lever, multiple locking:

M = 80 mm:
right hand Art.-Nr. 7501-020222
left hand Art.-Nr. 7501-020223

M = 100 mm:
right hand Art.-Nr. 7501-020232
left hand Art.-Nr. 7501-020233

Accessories:

Locking cam for inside opener:

Art.-Nr. 7101-020061

Spacer for locking cam, 3 mm:

Art.-Nr. 7500-020062

Strike for doors opening to inside, 74 mm:

right hand Art.-Nr. 7101-020520
left hand Art.-Nr. 7101-020521

Fastening bolt for push-rod, multiple locking:

Art.-Nr. 7101-020080

Spacer:

Art.-Nr. 7501-020063

IWO group

FEEL THE SERVICE!

www.iwogroup.eu sales@iwogroup.eu tel.: +420 602 558 254

NEW!

Locking technology for cold storage

Multiple pressing lever locking | Series 7505 | ROBUSTO

- Ideal locking system for extreme temperatures (i.e. testing chambers, shock froster, etc.)
- To be used with single- or multiple-point locking
- Multiple latching variations by modular design
- Options for customization available
- Complementary handle options NITRO and VITRO
- Material: Outside handle - stainless steel/plastic, Inside parts - stainless steel

Outside handle geared for the following door thicknesses:

door thickness	handle stainless steel / insert black
80 mm	Art.-Nr. 7503-020080
90 mm	Art.-Nr. 7503-020090
100 mm	Art.-Nr. 7503-020100
110 mm	Art.-Nr. 7503-020110
120 mm	Art.-Nr. 7503-020120
130 mm	Art.-Nr. 7503-020130
140 mm	Art.-Nr. 7503-020140
160 mm	Art.-Nr. 7503-020160
180 mm	Art.-Nr. 7503-020180
200 mm	Art.-Nr. 7503-020200

Other option:

door thickness	handle grey / insert black
80 mm	Art.Nr 7501-020080
90 mm	Art.Nr 7501-020090
100 mm	Art.Nr 7501-020100
110 mm	Art.Nr 7501-020110
120 mm	Art.Nr 7501-020120
130 mm	Art.Nr 7501-020130
140 mm	Art.Nr 7501-020140
160 mm	Art.Nr 7501-020160
180 mm	Art.Nr 7501-020180
200 mm	Art.Nr 7501-020200

Inside handle:

Multiple pressing lever locking:

for right handed (hinged) doors
Art-Nr. 7505-020010

for left handed (hinged) doors
Art-Nr. 7505-020011

Angular pressing lever :

for right handed (hinged) doors
Art-Nr. 7505-020020

for left handed (hinged) doors
Art-Nr. 7505-020021

(may be shortened to dimension of M= 80 mm)

Option:

Frame part:

Art.-Nr. 7505-020060

Fastening bolt for push-rod, multiple locking:

Art.-Nr. 7101-020080

Leaf hinge

Series 5000 | Lift-off

NEW!

Locking technology for cold storage

Leaf hinge | Series 5000 | Lift-off

- Robust stainless steel hinge for flash doors
- For coldroom doors, service doors, fire proof doors
- Rising
- Lift-off
- Theft protection
- Adjustability in two dimension
- Door weight capacity of 80 kg or as heavy duty version 120 kg using 2 hinges
- Material: Stainless steel

Variations:

Lift-off hinge, right hand rising
Art.-Nr. 5000-020011

Lift-off hinge, left hand rising
Art.-Nr. 5000-020021

Exploded view

* heavy duty version upon request

NEW!

Leaf hinge

Series 4297 | Flash doors

NEW!

Locking technology for cold storage

Leaf hinge | Series 4297

- High-performance hinge for flush doors
- For cold rooms and many more applications
- Rising
- Door weight capacity max. 80 kg using 2 hinges
- Material: Zinc die-cast

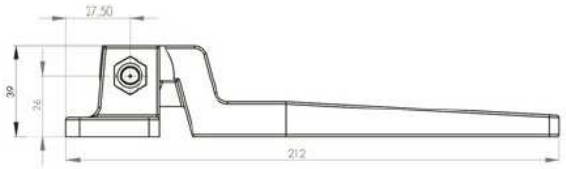

Surface finishes:

Chromium-plated, left hand rising:
Art.-Nr. 4297-020021

Chromium-plated, right hand rising:
Art.-Nr. 4297-020020

Grey (RAL 7001), left hand rising:
Art.-Nr. 4297-020011

Grey (RAL 7001), right hand rising:
Art.-Nr. 4297-020010

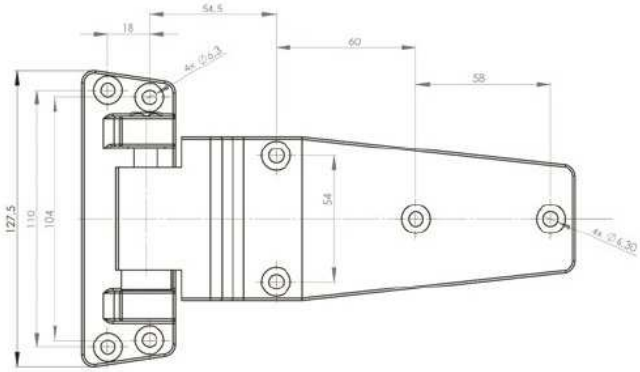

NEW!
Pinlock (gas-tight)
Series 7150

NEW!

Locking technology for cold storage

Pinlock (gas-tight) | Series 7150

- Solid, gas-tight latch for sliding doors
- For cold storage and other applications
- For door thicknesses 80 - 200 mm
- Ready for master key systems, KABA-Versions available
- Profile locking cylinder
- No freeze-ups due to gas-tight construction
- Material: Housing, pin - plastic

Example of use:

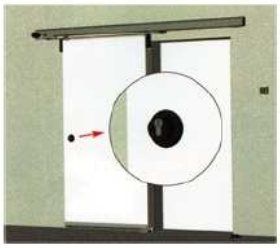

Pinlock:

X = 80 mm	Art.-Nr. 7150-020080
X = 100 mm	Art.-Nr. 7150-020100
X = 120 mm	Art.-Nr. 7150-020120
X = 140 mm	Art.-Nr. 7150-020140
X = 160 mm	Art.-Nr. 7150-020160

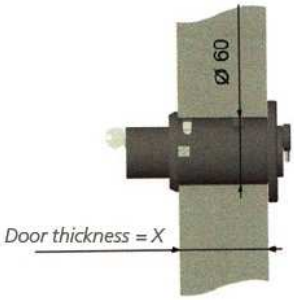

Option:

Status report (Reed-Switch):

X = 80 mm	Art.-Nr. 7150-020081
X = 100 mm	Art.-Nr. 7150-020101
X = 120 mm	Art.-Nr. 7150-020121
X = 140 mm	Art.-Nr. 7150-020141
X = 160 mm	Art.-Nr. 7150-020161

Status report (Reed switch) with 0,5 m wire*

Art.-Nr. 7150-020081

Spacer ring, 5 mm for adaptation to varying door thicknesses:

Art.-Nr. 7150-020005

*more versions upon request

NEW!

Locking technology for cold storage

Multi-functional locking system | Series 7503 | NITRO

- Modern turning lever latch for high standards
- Multiple latching variations by modular design
- Ideal for cold storage rooms
- Quick and easy assembly
- Integrated adaptation to varying door thickness tolerances
- To be used with right- and left-hinged doors
- Lockable and ready for master-key systems, KABA-Versions available
- Diversity of keys available
- Standard door thicknesses 80 - 200 mm
- Material: Handle - stainless steel; Housing - plastic; Inner parts - stainless steel

Outside handle geared for the following door thicknesses:

door thickness	handle stainless steel / insert black
80 mm	Art.-Nr. 7503-020080
90 mm	Art.-Nr. 7503-020090
100 mm	Art.-Nr. 7503-020100
110 mm	Art.-Nr. 7503-020110
120 mm	Art.-Nr. 7503-020120
130 mm	Art.-Nr. 7503-020130
140 mm	Art.-Nr. 7503-020140
160 mm	Art.-Nr. 7503-020160
180 mm	Art.-Nr. 7503-020180
200 mm	Art.-Nr. 7503-020200

Angular press lever, multiple locking, M = 80 mm:

right hand Art.-Nr. 7500-020010
left hand Art.-Nr. 7500-020011

Angular press lever, multiple locking, M = 100 mm:

right hand Art.-Nr. 7500-020012
left hand Art.-Nr. 7500-020013

Variations of turning handle inside-openers:

Handle with catch lock, M = 80 mm:

Art.-Nr. 7503-020220

Press lever:

M = 80 mm:
Art.-Nr. 7501-020221

M = 100 mm:
Art.-Nr. 7501-020231

For door opening to inside:

Art.-Nr. 7503-020235

Press lever, multiple locking:

M = 80 mm:
right hand Art.-Nr. 7501-020222
left hand Art.-Nr. 7501-020223

M = 100 mm:
right hand Art.-Nr. 7501-020232
left hand Art.-Nr. 7501-020233

Accessories:

Locking cam for inside opener:

Art.-Nr. 7101-020061

Spacer for locking cam, 3 mm:

Art.-Nr. 7500-020062

Strike for doors opening to inside, 74 mm:

right hand Art.-Nr. 7101-020520
left hand Art.-Nr. 7101-020521

Fastening bolt for push-rod, multiple locking:

Art.-Nr. 7101-020080

Spacer:

Art.-Nr. 7501-020063

Locking technology for cold storage

Multi-functional locking system | Series 7501 | VITRO

- Modern turning lever latch for high standards
- Multiple latching variations by modular design
- Ideal for cold storage rooms
- Quick and easy assembly
- Integrated adaptation to varying door thickness tolerances
- To be used with right- and left-hinged doors
- Lockable and ready for master-key systems, KABA-Versions available
- Diversity of keys available
- Standard door thicknesses 80 - 200 mm
- Material: Handle - plastic; Mechanical parts - zinc die-cast, cathodic dip painted (black), galvanized steel, stainless steel

Outside handle geared for the following door thicknesses:

door thickness	handle grey / insert black
80 mm	Art.Nr 7501-020080
90 mm	Art.Nr 7501-020090
100 mm	Art.Nr 7501-020100
110 mm	Art.Nr 7501-020110
120 mm	Art.Nr 7501-020120
130 mm	Art.Nr 7501-020130
140 mm	Art.Nr 7501-020140
160 mm	Art.Nr 7501-020160
180 mm	Art.Nr 7501-020180
200 mm	Art.Nr 7501-020200

Angular press lever, multiple locking, M = 80 mm:

right hand Art.-Nr. 7500-020010
left hand Art.-Nr. 7500-020011

Angular press lever, multiple locking, M = 100 mm:

right hand Art.-Nr. 7500-020012
left hand Art.-Nr. 7500-020013

Variations of turning handle inside-openers:

Handle with catch lock, M = 80 mm:

Art.-Nr. 7501-020220

Press lever:

M = 80 mm:
Art.-Nr. 7501-020221

M = 100 mm:
Art.-Nr. 7501-020231

For doors opening to inside:

Art.-Nr. 7501-020235

Press lever, multiple locking:

M = 80 mm:
right hand Art.-Nr. 7501-020222
left hand Art.-Nr. 7501-020223

M = 100 mm:
right hand Art.-Nr. 7501-020232
left hand Art.-Nr. 7501-020233

Accessories:

Locking cam for inside opener:

Art.-Nr. 7101-020061

Spacer for locking cam, 3 mm:

Art.-Nr. 7500-020062

Strike for doors opening to inside, 74 mm

right hand Art.-Nr. 7101-020520
left hand Art.-Nr. 7101-020521

Fastening bolt for push-rod, multiple locking:

Art.-Nr. 7101-020080

Spacer:

Art.-Nr. 7501-020063

Locking technology for cold storage

Multi-functional locking system | Series 7101 | TURNO

- Stainless steel turning handle
- For cold storage doors
- For door thicknesses 60 - 200 mm
- Many suitable inside opener variations
- Different keys available
- Multiple latching variations by modular design
- Easy assembly with colour-coded adapter-set and convenient bayonet catch
- Material: Stainless steel, zinc die-cast, plastic

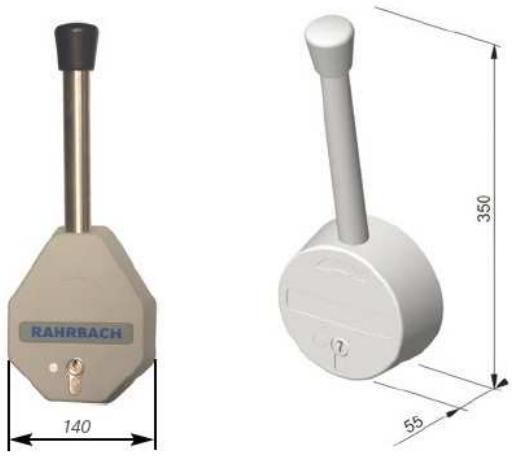

TURNO with variations of inside-openers:

Press lever

Press lever for door opening to inside

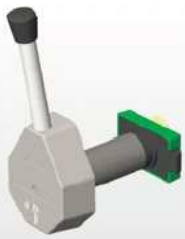

Push opener

Multiple locking

Locking technology for cold storage

Multi-functional locking system | Series 7101 | TURNO

Outside handle with profile locking cylinder (key number 1001):

Cap, black, circular:
right hand Art.-Nr. 7101-021290
left hand Art.-Nr. 7101-021291

Cap, black, angular:
right hand Art.-Nr. 7101-021200
left hand Art.-Nr. 7101-021201

Cap, grey, circular:
right hand Art.-Nr. 7101-021300
left hand Art.-Nr. 7101-021301

Cap, grey, angular:
right hand Art.-Nr. 7101-021220
left hand Art.-Nr. 7501-021221

Cap, red, circular:
right hand Art.-Nr. 7101-021270
left hand Art.-Nr. 7101-021271

Cap, red, angular:
right hand Art.-Nr. 7101-021260
left hand Art.-Nr. 7101-021261

Cap, blue, circular:
right hand Art.-Nr. 7101-021280
left hand Art.-Nr. 7101-021281

Cap, blue, angular:
right hand Art.-Nr. 7101-021210
left hand Art.-Nr. 7101-021211

Outside handle, non-lockable:

Cap, black, circular:
right hand Art.-Nr. 7101-021294
left hand Art.-Nr. 7101-021295

Cap, black, angular:
right hand Art.-Nr. 7101-021204
left hand Art.-Nr. 7101-021205

Cap, grey, circular:
right hand Art.-Nr. 7101-021304
left hand Art.-Nr. 7101-021305

Cap, grey, angular:
right hand Art.-Nr. 7101-021224
left hand Art.-Nr. 7101-021225

Cap, red, circular:
right hand Art.-Nr. 7101-021274
left hand Art.-Nr. 7101-021275

Cap, red, angular:
right hand Art.-Nr. 7101-021264
left hand Art.-Nr. 7101-021265

Cap, blue, circular:
right hand Art.-Nr. 7101-021284
left hand Art.-Nr. 7101-021285

Cap, blue, angular:
right hand Art.-Nr. 7101-021214
left hand Art.-Nr. 7101-021215

Outside handle prepared for KABA locking cylinder:

Cap, black, circular:
right hand Art.-Nr. 7101-021292
left hand Art.-Nr. 7101-021293

Cap, black, angular:
right hand Art.-Nr. 7101-021202
left hand Art.-Nr. 7101-021203

Cap, grey, circular:
right hand Art.-Nr. 7101-021302
left hand Art.-Nr. 7101-021303

Cap, grey, angular:
right hand Art.-Nr. 7101-021222
left hand Art.-Nr. 7101-021223

Cap, red, circular:
right hand Art.-Nr. 7101-021272
left hand Art.-Nr. 7101-021273

Cap, red, angular:
right hand Art.-Nr. 7101-021262
left hand Art.-Nr. 7101-021263

Cap, blue, circular:
right hand Art.-Nr. 7101-021282
left hand Art.-Nr. 7101-021283

Cap, blue, angular:
right hand Art.-Nr. 7101-021212
left hand Art.-Nr. 7101-021213

Locking technology for cold storage

Multi-functional locking system | Series 7101 | TURNO

TURNO Inside opener / Press lever | inside opener for doors opening to inside | Inside opener for multi-point locking

M = 78 mm:
left hand
Art.-Nr. 7101-020303
right hand
Art.-Nr. 7101-020302

M = 102 mm:
left hand
Art.-Nr. 7101-020419
right hand
Art.-Nr. 7101-020418

Left hand/right hand:
upon request

Left hand:
M = 78 mm
Art.-Nr. 7101-020301
M = 102 mm
Art.-Nr. 7101-020417

Right hand:
M = 78 mm
Art.-Nr. 7101-020300
M = 102 mm
Art.-Nr. 7101-020416

Option:

Locking cam:
23 mm Art.-Nr. 7101-020064
32 mm Art.-Nr. 7101-020062

Spacer:
Art.-Nr. 7101-020050

Mounting accessories
(Set of cams, bolts, etc.):
Art.-Nr. 7101-020091

Adapter system:
Upon request

Door thickness tolerance
compensation disc
Art.-Nr. 7101.0023

Press lever:
Art.-Nr. 7101-020010

Extension for press lever:
Art.-Nr. 7101-020030

Fastening bolt for push-rod,
multiple locking:
Art.-Nr. 7101-020080

Strike, 74 mm:
left hand Art.-Nr. 7101-020521
right hand Art.-Nr. 7101-020520

Sticker, fluorescent:
Art.-Nr. 7101-0262

TURNO push-inside opener:

Push-inside opener:
right hand
Art.-Nr. 7101-020044
left hand
Art.-Nr. 7101-020045

Washer:
Art.-Nr. 7101-020055

Option:

Fastening part, 30 mm:
Art.-Nr. 7101-020072

Fastening part, 55 mm:
Art.-Nr. 7101-020070

Mounting accessories
(Set of cams, bolts, etc.):
Art.-Nr. 7101-020092

Locking technology for cold storage

Multi-functional locking system | Series 7101 | TURNO

Structure:

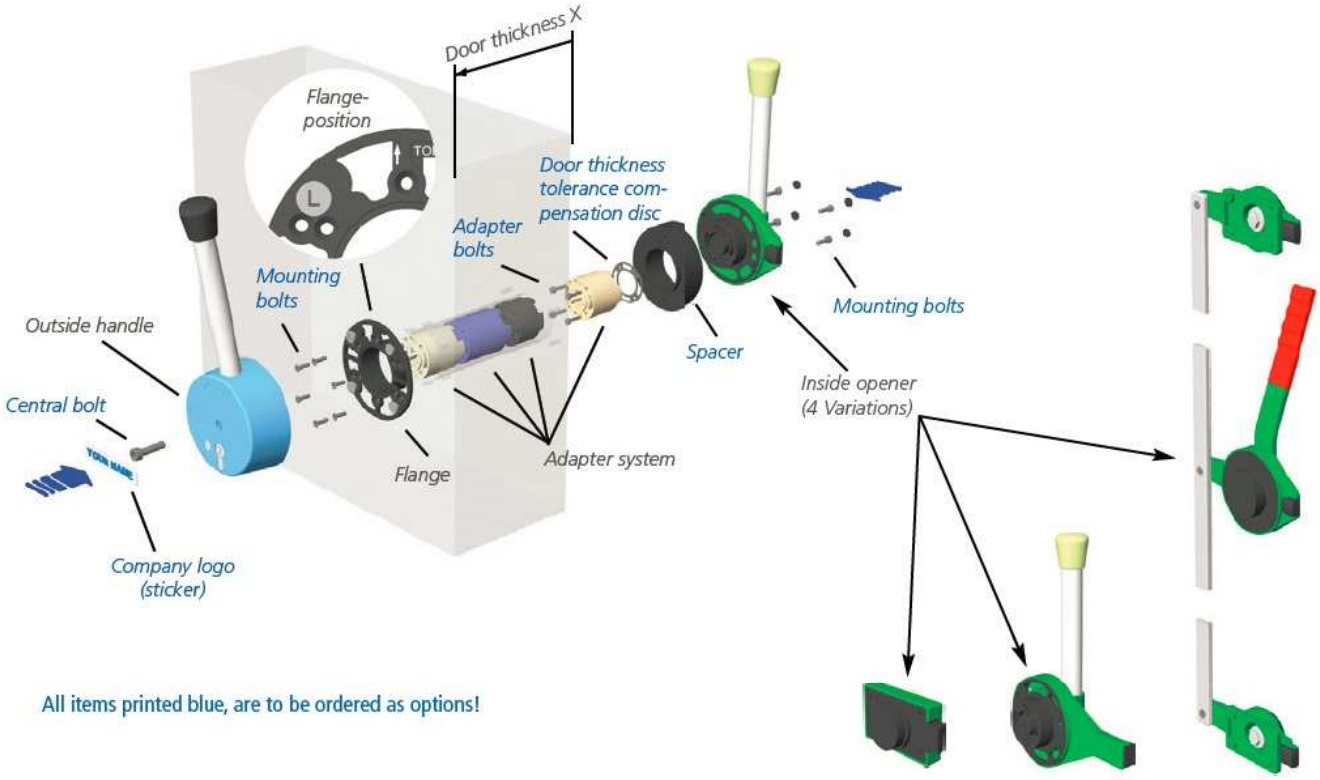

All items printed blue, are to be ordered as options!

TURNO Logistical and assembly-advantages:

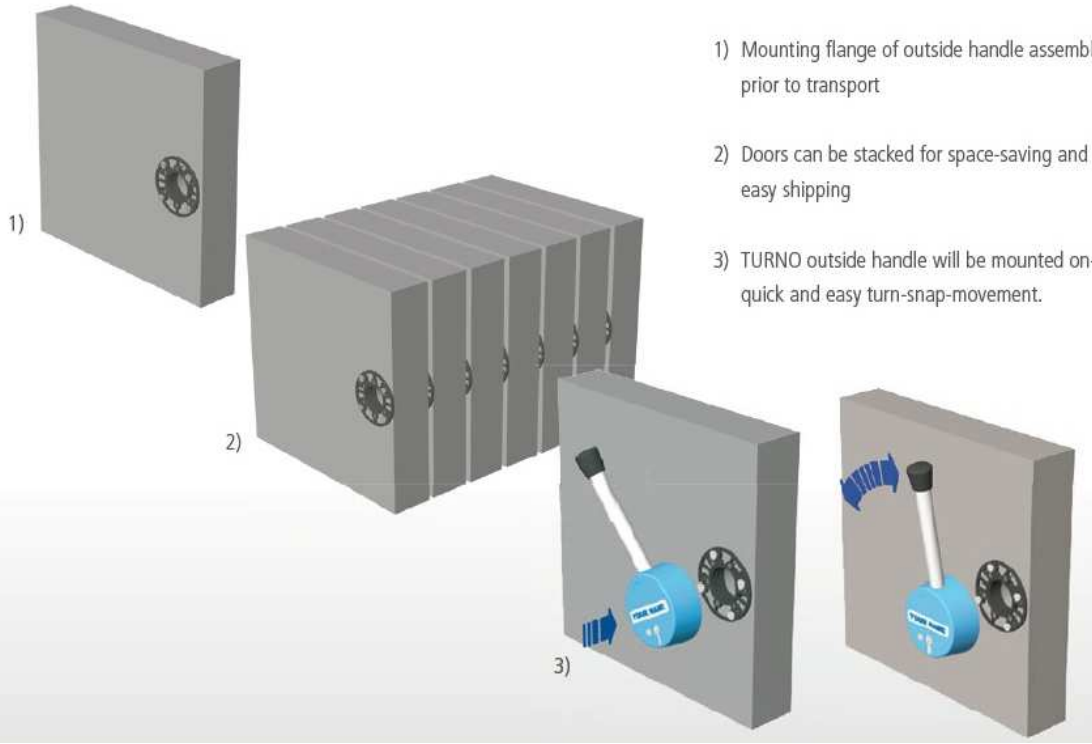

1) Mounting flange of outside handle assembled prior to transport

2) Doors can be stacked for space-saving and easy shipping

3) TURNO outside handle will be mounted on-site by quick and easy turn-snap-movement.

NEW!

Locking technology for cold storage

Multiple pressing lever locking | Series 7505 | ROBUSTO

- Ideal locking system for extreme temperatures (i.e. testing chambers, shock froster, etc.)
- To be used with single- or multiple-point locking
- Multiple latching variations by modular design
- Options for customization available
- Complementary handle options NITRO and VITRO
- Material: Outside handle - stainless steel/plastic, Inside parts - stainless steel

Outside handle geared for the following door thicknesses:

door thickness	handle stainless steel / insert black
80 mm	Art.-Nr. 7503-020080
90 mm	Art.-Nr. 7503-020090
100 mm	Art.-Nr. 7503-020100
110 mm	Art.-Nr. 7503-020110
120 mm	Art.-Nr. 7503-020120
130 mm	Art.-Nr. 7503-020130
140 mm	Art.-Nr. 7503-020140
160 mm	Art.-Nr. 7503-020160
180 mm	Art.-Nr. 7503-020180
200 mm	Art.-Nr. 7503-020200

Other option:

door thickness	handle grey / insert black
80 mm	Art.Nr 7501-020080
90 mm	Art.Nr 7501-020090
100 mm	Art.Nr 7501-020100
110 mm	Art.Nr 7501-020110
120 mm	Art.Nr 7501-020120
130 mm	Art.Nr 7501-020130
140 mm	Art.Nr 7501-020140
160 mm	Art.Nr 7501-020160
180 mm	Art.Nr 7501-020180
200 mm	Art.Nr 7501-020200

Inside handle:

Multiple pressing lever locking:

for right handed (hinged) doors
Art-Nr. 7505-020010

for left handed (hinged) doors
Art-Nr. 7505-020011

Angular pressing lever :

for right handed (hinged) doors
Art-Nr. 7505-020020

for left handed (hinged) doors
Art-Nr. 7505-020021

(may be shortened to dimension of M = 80 mm)

Accessories:

Locking cam for inside opener:

Art.-Nr. 7505-020060

Spacer for locking cam, 3 mm:

Art.-Nr. 7505-020061

Fastening bolt for push-rod, multiple locking:

Art.-Nr. 7101-020080

Locking technology for cold storage

System 6000 | JUMBO

- Classic, self-closing latch
- For hinged doors
- For right- and left-hinged doors
- Wide variety in surface finishes
- Material: Housing - zinc die-cast; Inside opener - metal/plastic

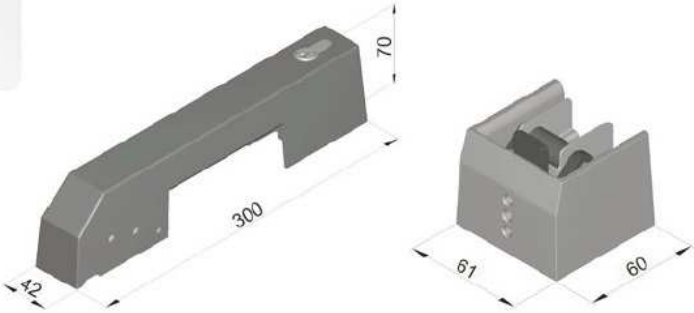

JUMBO system structure:

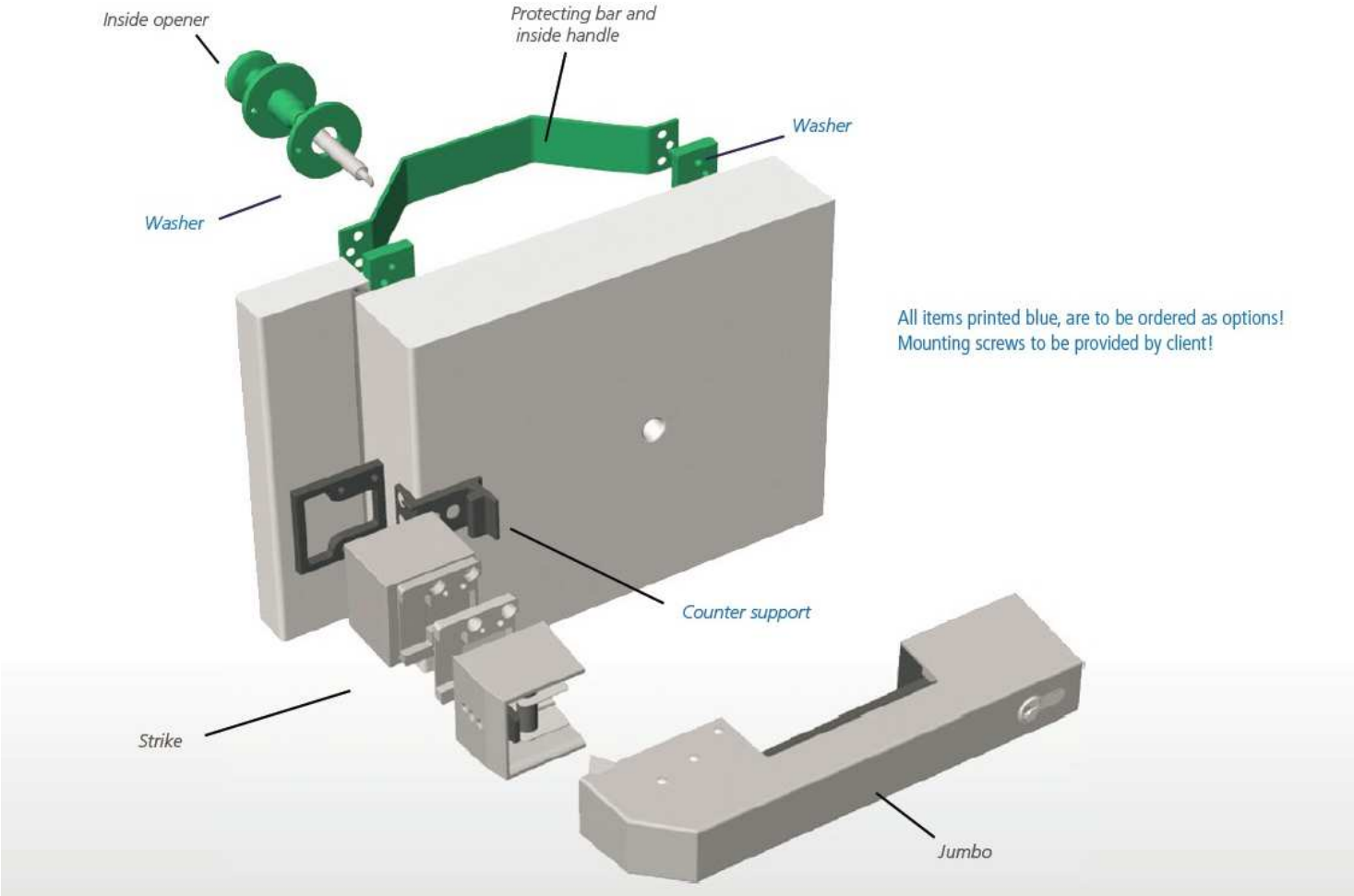

All items printed blue, are to be ordered as options!
Mounting screws to be provided by client!

Locking technology for cold storage

System 6000 | JUMBO

Bestandteile:

Inside opener (Dimension T = …):

40-56 mm	Art.-Nr. 6000-020530
60-76 mm	Art.-Nr. 6000-020531
76-92 mm	Art.-Nr. 6000-020532
92-108 mm	Art.-Nr. 6000-020533
108-124 mm	Art.-Nr. 6000-020534
124-140 mm	Art.-Nr. 6000-020535
140-156 mm	Art.-Nr. 6000-020536
156-172 mm	Art.-Nr. 6000-020537

Strike, chromium-plated (Dimension S = …):

24-43 mm	Art.-Nr. 6000-020800
30-43 mm	Art.-Nr. 6000-020702
37-51 mm	Art.-Nr. 6000-020703
44-58 mm	Art.-Nr. 6000-020704
51-65 mm	Art.-Nr. 6000-020705
59-72 mm	Art.-Nr. 6000-020706
66-80 mm	Art.-Nr. 6000-020707

Strike, grey, RAL 7001 (Dimension S = …):

24-43 mm	Art.-Nr. 6000-020801
30-43 mm	Art.-Nr. 6000-020720
37-51 mm	Art.-Nr. 6000-020721
44-58 mm	Art.-Nr. 6000-020722
51-65 mm	Art.-Nr. 6000-020723
59-72 mm	Art.-Nr. 6000-020724
66-80 mm	Art.-Nr. 6000-020725

Strike, chromium-plated (Dimension S = …):

71-85 mm	Art.-Nr. 6000-020708
78-92 mm	Art.-Nr. 6000-020709
86-100 mm	Art.-Nr. 6000-020710
91-105 mm	Art.-Nr. 6000-020711
99-112 mm	Art.-Nr. 6000-020712
106-120 mm	Art.-Nr. 6000-020713

Strike, grey, RAL 7001 (Dimension S = …):

71-85 mm	Art.-Nr. 6000-020726
78-92 mm	Art.-Nr. 6000-020727
86-100 mm	Art.-Nr. 6000-020728
91-105 mm	Art.-Nr. 6000-020729
99-112 mm	Art.-Nr. 6000-020730
106-120 mm	Art.-Nr. 6000-020731

Status report (Reed switch*)
with 0,5 m wire

Counter support (Dimension F = …):

13 mm	Art.-Nr. 6000-020699
16 mm	Art.-Nr. 6000-020700
19 mm	Art.-Nr. 6000-020701

*more versions upon request

Locking technology for cold storage

System 6000 and 6002 | JUMBO

Bestandteile:

Standard locking cylinder:

chromium-plated Art.-Nr. 6000-020893
grey (RAL 7001) Art.-Nr. 6000-020894

Profile locking cylinder:

chromium-plated Art.-Nr. 6000-020695
grey (RAL 7001) Art.-Nr. 6000-020696

Prepared for profile locking cylinder:

chromium-plated Art.-Nr. 6000-020551
grey (RAL 7001) Art.-Nr. 6000-020550

Prepared for KABA locking cylinder:

chromium-plated Art.-Nr. 6000-020559
grey (RAL 7001) Art.-Nr. 6000-020558

External handle for in turning cold room doors

External handle, lockable	Art.-Nr. 6002-020675
Inside opener	Art.-Nr. 6002-020674
Strike	Art.-Nr. 6002-020676
Counter bearings	Art.-Nr. 6000-020678
Counter bearings	Art.-Nr. 6000-020701

Protection bar and inside handle:

Art.-Nr. 6000-020002

Option:

Spacer, 6.5 mm for inside handle:
6,5 mm Art.-Nr. 6000-020754

Spacer 5 mm for inside opener:
5 mm Art.-Nr. 6000-020615

Cover plug for use without locking cylinder:
Art.-Nr. 6000-020556

Spacer for strike, 7.5 mm:
7,5 mm Art.-Nr. 6000-020719

Locking technology for cold storage

Cold storage latch | Series 6004 | RONDO

- Modern, self-closing latch
- For hinged doors
- For right- and left-hinged doors
- Wide variety in surface finishes
- Material:
  Cap and outside lever- plastic; Inside mechanism - zinc die-cast;
  Inside opener - metal/plastic; Strike - zinc die-cast

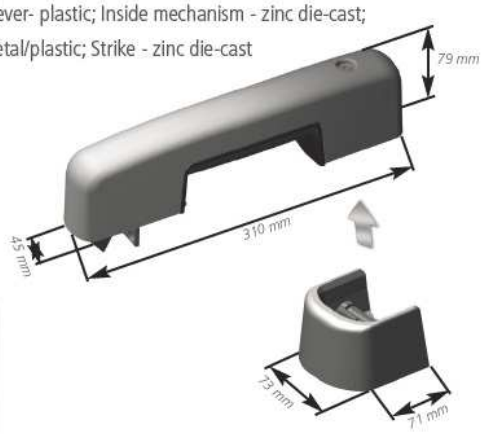

Variations:

Cap, grey:

Base body, black
Art.-Nr. 6004-021010

Base body, chromium-plated (roto-finish)
Art.-Nr. 6004-021011

Cap, blue:

Base body, black
Art.-Nr. 6004-021020

Base body, chromium-plated (roto-finish)
Art.-Nr. 6004-021021

Cap, black:

Base body, black
Art.-Nr. 6004-021000

Base body, chromium-plated (roto-finish)
Art.-Nr. 6004-021001

Protecting bar and inside handle:

Art.-Nr. 6000-020002

Status report (Reed switch)
with 0,5 m wire*

Strike, black (Dimension... S = ...):

32,5-48,5 mm	Art.-Nr. 6004-020100
43,5-56,5 mm	Art.-Nr. 6004-020101
52,5-68,5 mm	Art.-Nr. 6004-020102
60,5-76,5 mm	Art.-Nr. 6004-020103
72,5-88,5 mm	Art.-Nr. 6004-020104
80,5-96,5 mm	Art.-Nr. 6004-020105
97,5-108,5 mm	Art.-Nr. 6004-020106
105,5-116,5 mm	Art.-Nr. 6004-020107

Strike, chromium-plated (roto-finish)
(Dimension S = ...):

32,5-48,5 mm	Art.-Nr. 6004-020110
43,5-56,5 mm	Art.-Nr. 6004-020111
52,5-68,5 mm	Art.-Nr. 6004-020112
60,5-76,5 mm	Art.-Nr. 6004-020113
72,5-88,5 mm	Art.-Nr. 6004-020114
80,5-96,5 mm	Art.-Nr. 6004-020115
97,5-108,5 mm	Art.-Nr. 6004-020116
105,5-116,5 mm	Art.-Nr. 6004-020117

Inside opener and Counter support on page 30

Option:

Spacer for inside handle:
6,5 mm Art.-Nr. 6000-020754

Spacer for inside opener:
5 mm Art.-Nr. 6000-020615

*more versions upon request

Verschlusstechnik für Kühlzellen/-räume

Cold storage latch | Series 7800 | ARCTO

- Self-closing latch for hinged doors
- Consistent design with inside- and outside latching
- For cold storage doors
- To be utilized for left- and right-hinged doors
- Lockable
- Option available with electric status report
- Wide variety of colours
- Material: Plastic; Axles, springs, pins - galvanized steel

Outside latching variation:

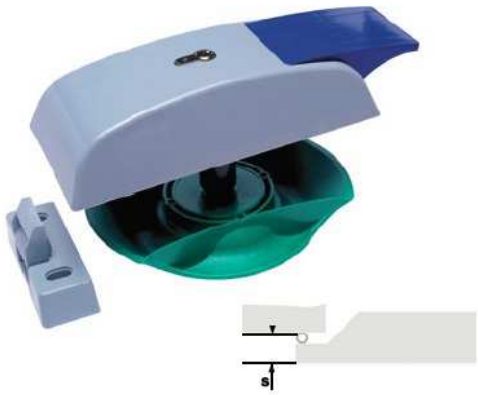

With the addition of spacers, the strike will be elevated by 10 mm increments.

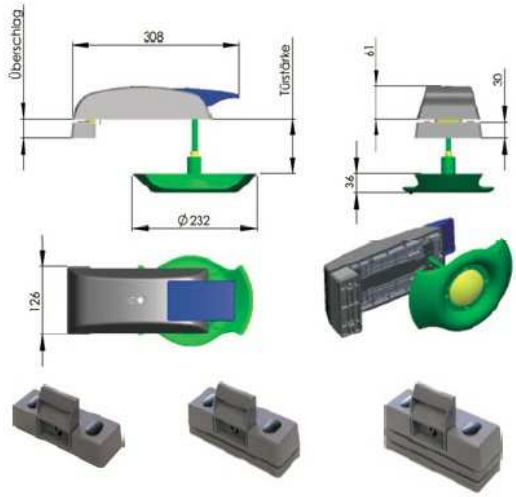

S = 35 - 45 mm *S = 45 - 55 mm + 1 spacer* *S = 55 - 65 mm + 2 spacers*

Inside latching variation:

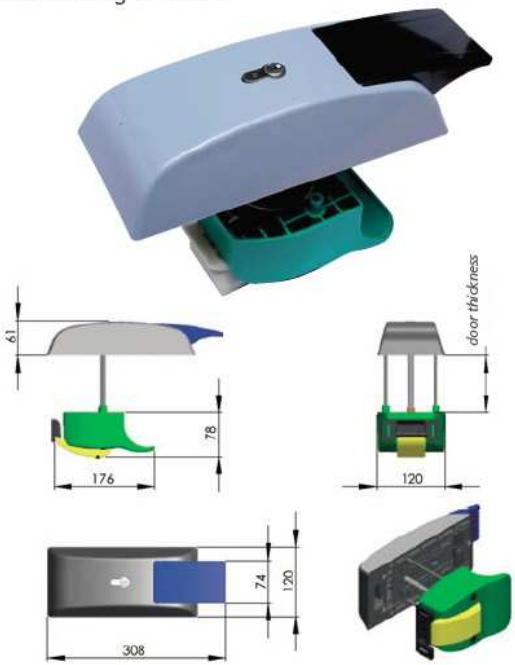

Surface finishes:

Handle colour blue:

With emergency opener and strike:
Standard Art.-Nr. 7800-020100
With switch, status report Art.-Nr. 7800-020110

With inside latch and locking part:
Standard Art.-Nr. 7800-020010
With switch, status report: Art.-Nr. 7800-020020

Handle colour grey:

With emergency opener and strike:
Standard Art.-Nr. 7800-020102
With switch, status report Art.-Nr. 7800-020112

With inside latch and locking part:
Standard Art.-Nr. 7800-020012
With switch, status report: Art.-Nr. 7800-020022

Handle colour black:

With emergency opener and strike:
Standard Art.-Nr. 7800-020101
With switch, status report Art.-Nr. 7800-020111

With inside latch and locking part:
Standard: Art.-Nr. 7800-020011
With switch, status report Art.-Nr. 7800-020021

Option:

Spacer for strike, 10 mm:

Art.-Nr. 7800-020140

Mounting sets for different door thickness:

	Outside latch	Inside latch
60 mm	7800-020150	7800-020050
80 mm	7800-020151	7800-020051
100 mm	7800-020152	7800-020052
120 mm	7800-020153	7800-020053
140 mm	7800-020154	7800-020054

Other door thicknesses upon request

Locking technology for cold storage

Camlock | Series 0270

- Economy-minded latching system for flexible assembly of foamed wall-panels
- Lasting tightening force through cam-action
- Tightening hook safely secured for transport
- Suitable for multiple assembly and dismantling
- Galvanized pulling hook (3 mm) for high tensile strength
- Counter part (height 43 mm) suitable for small installation space
- Available installation mandrels prevent foam leakage
- Materials:
  Housing - plastic; Mechanical parts - steel / zinc die-cast

Optional installation assistance:

Camlock:

Art.-Nr. 0270-020001

Counter part:

Art.-Nr. 0270-020010

Mandrel for camlock:
Art.-Nr. 0270-020009

Mandrel for counter part:
Art.-Nr. 0270-020019

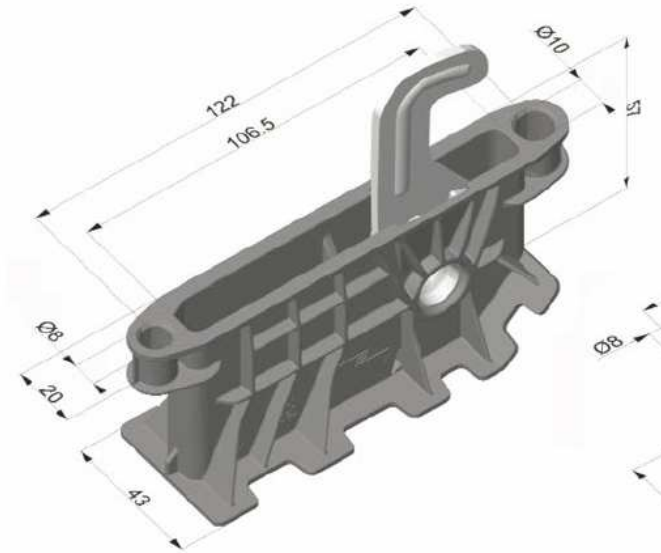

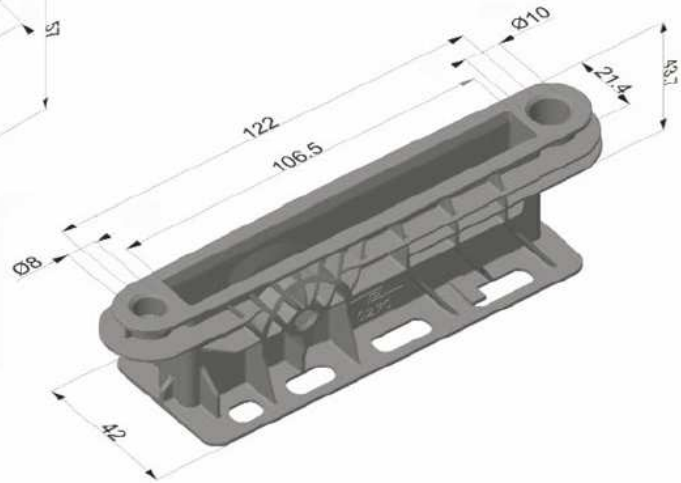

Locking technology for cold storage

Edge-mounted hinge | Series 4514 | FUTURO

- Stylish hinge for customised colour-schemes
- Universal use
- Adjustability in 3 dimensions
- Choice of rising and non-rising
- Left- and right-hinged doors
- Wide variety in surface finishes
- Coloured caps, removable
- Protection against unauthorized dismantling
- Spacers in 5 mm increments
- Door weight capacity of max. 80 kg using 2 hinges
- Material: Metal, zinc die-cast, plastic
- Caps of plastic

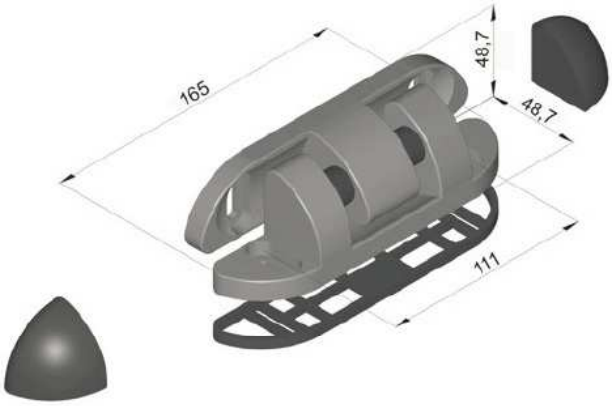

Adustability

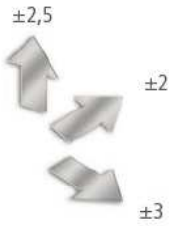

Surface finishes:

Chromium-plated:

right hand, rising
Art.-Nr. 4514-020200

left hand, rising
Art.-Nr. 4514-020201

non-rising
Art.-Nr. 4514-020502

Grey (RAL 7001):

right hand, rising
Art.-Nr. 4514-020210

left hand, rising
Art.-Nr. 4514-020211

non-rising
Art.-Nr. 4514-020512

Option:

Spacer, 5 mm:

black	Art.-Nr. 4514-020050
grey	Art.-Nr. 4514-020051
red	Art.-Nr. 4514-020052
blue	Art.-Nr. 4514-020053
green	Art.-Nr. 4514-020054

Caps, black, set of 2:
Art.-Nr. 4514-020010

Caps, grey, set of 2:
Art.-Nr. 4514-020011

Caps, red, set of 2:
Art.-Nr. 4514-020012

Caps, blue, set of 2:
Art.-Nr. 4514-020013

Caps, green, set of 2:
Art.-Nr. 4514-020014

Locking technology for cold storage

Edge-mounted hinge | Series 4000/4001

- Classy hinge in timeless design
- For cold storage doors
- Chromium-plated and painted
- Protection against unauthorized dismantling
- Choice of rising / non-rising
- Door weight capacity of max. 80 kg using 2 hinges
- Material: Zinc die-cast

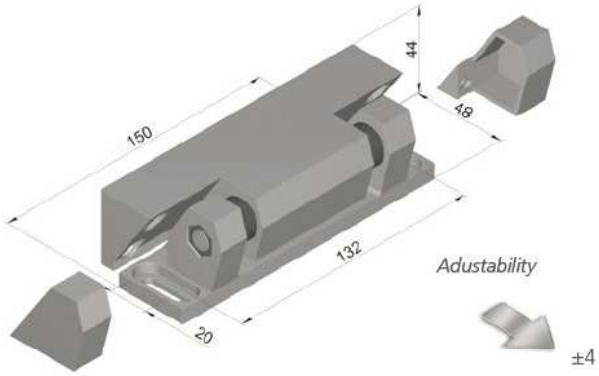

Securing of cap

Surface finishes:

Chromium-plated:

right hand, rising
Art.-Nr. 4001-020262

left hand, rising
Art.-Nr. 4001-020263

non-rising
Art.-Nr. 4000-020271

Grey (RAL 7001):

right hand, rising
Art.-Nr. 4001-020260

left hand, rising
Art.-Nr. 4001-020261

non-rising
Art.-Nr. 4000-020265*

Option:

Spacer, 5 mm:

Art.-Nr. 4000-020548

*Upon request / minimum order quantities apply

Locking technology for cold storage

Edge-mounted hinge | Series 4510/4511

- Classy hinge in linear design
- For cold storage doors
- Chromium-plated and painted
- Protection against unauthorized dismantling
- Adjustable in 2 dimensions
- Choice of rising / non-rising
- Door weight capacity of max. 80 kg using 2 hinges
- Material: Zinc die-cast

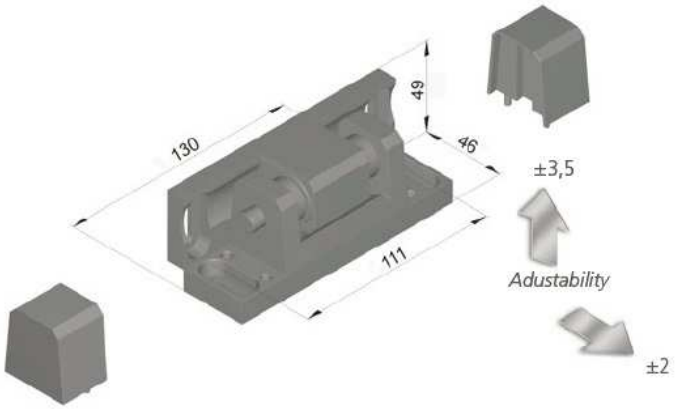

Securing of cap

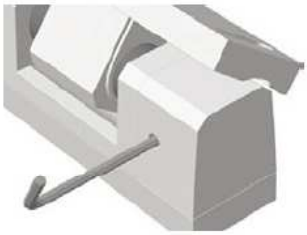

Surface finishes:

Chromium-plated:

right hand, rising
Art.-Nr. 4511-020606

left hand, rising
Art.-Nr. 4511-020607

non-rising
Art.-Nr. 4510-020603

Grey (RAL 7001):

right hand, rising
Art.-Nr. 4511-020604

left hand, rising
Art.-Nr. 4511-020609

non-rising
Art.-Nr. 4510-020608*

Option:

Spacer, 5 mm:

Art.-Nr. 4510-020614

Spacer, 15 mm:

Art.-Nr. 4510-020967

Locking technology for cold storage

Edge-mounted hinge | Series 4002/4003

- Classy hinge in retro-look
- For cold storage doors
- Protection against unauthorized dismantling
- Choice of rising / non-rising
- Lift-off capability
- Door weight capacity of max. 40 kg using 2 hinges
- Material: Zinc die-cast

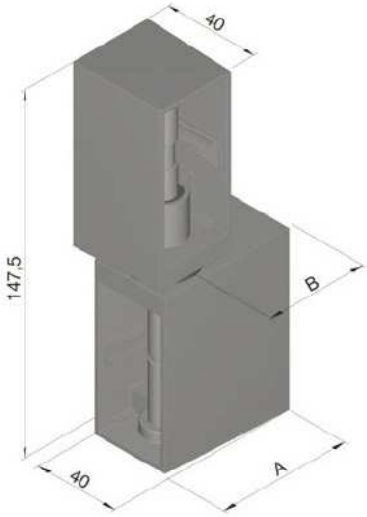

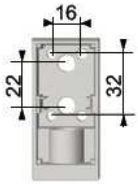

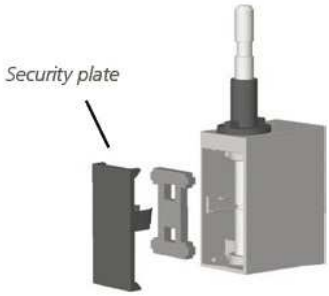

Surface finishes:

Chromium-plated:

right hand, rising,
Dimension A= 58 mm
Dimension B = 40 mm
Art.-Nr. 4003-020776*

left hand, rising,
Special dimension A+B
upon request

for right- and left-hinged doors
Dimension A = 58 mm
Dimension B = 40 mm
Art.-Nr. 4002-020770

Grey (RAL 7001):

right hand, rising,
Dimension A= 58 mm
Dimension B = 40 mm
Art.-Nr. 4003-020779*

left hand, rising,
Special dimension A+B
upon request

for right- and left-hinged doors
Dimension A = 58 mm
Dimension B = 40 mm
Art.-Nr. 4002-020773

Option:

Security plate:

Art.-Nr. 4002-020197

Spacer, 2 mm:

2 mm Art.-Nr. 4002-020919
11 mm Art.-Nr. 4002-020920

*Upon request / minimum order quantities apply

Locking technology for cold storage

Edge-mounted hinge | Series 4004

- Robust composite hinge from plastic and stainless steel
- For cold storage doors
- Protection against unauthorized dismantling
- Rising
- Adjustability in 3 dimensions
- Corrosion-resistant
- Door weight capacity of max. 80 kg using 2 hinges
- Material: Metal/Plastic, brushed stainless steel

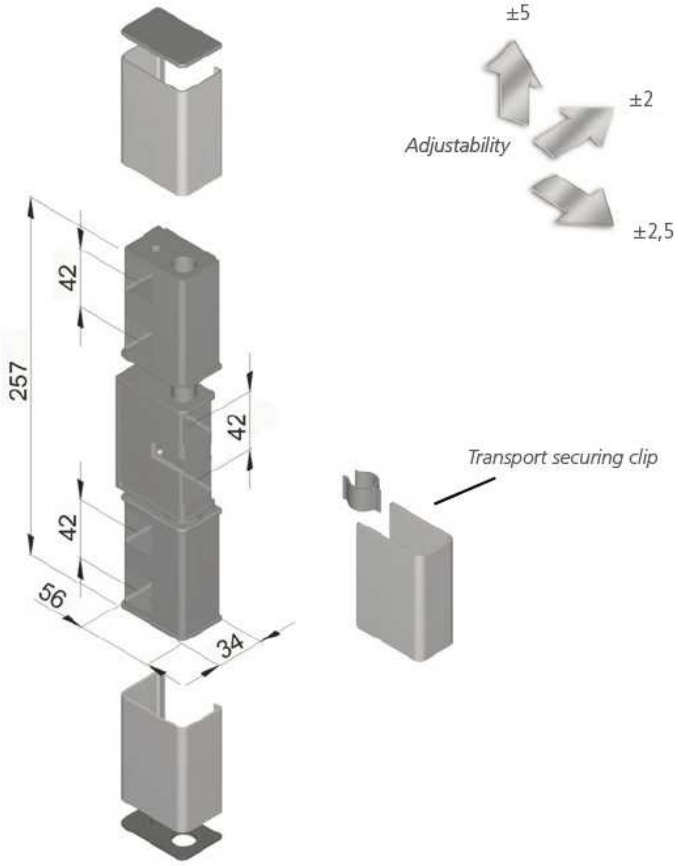

Height adjustment

Edge-mounted hinge:

Black, stainless steel:

right hand Art.-Nr. 4004-020100
left hand Art.-Nr. 4004-020101

Option:

Spacer 5 mm:

Art.-Nr. 4004-020010

Locking technology for cold storage

Edge-mounted hinge | Series 4006

- Edge-mounted hinge with stainless steel appearance
- For cold storage doors
- Protection against unauthorized dismantling
- Rising
- Lift-off capability
- Adjustability in 3 dimensions
- Corrosion-resistant
- Door weight capacity of max. 40 kg using 2 hinges
- Material: Metal/Plastic, brushed stainless steel

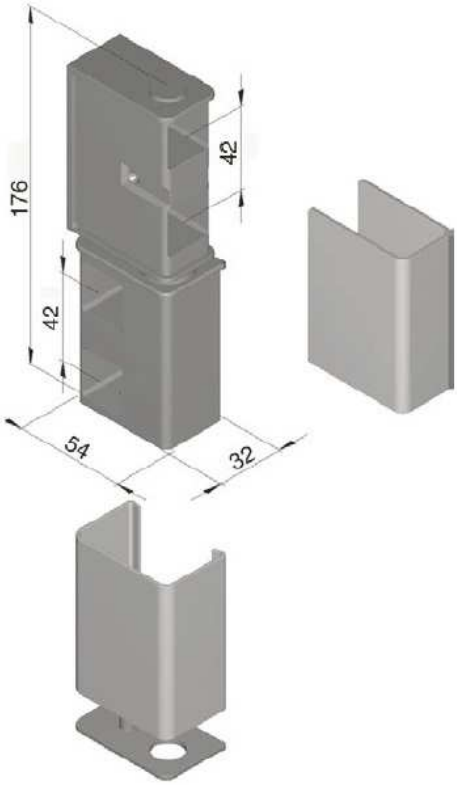

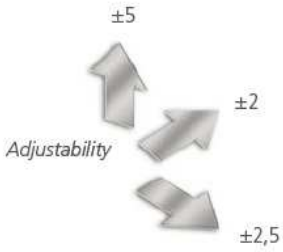

Height adjustment

Edge-mounted hinge:

Black, stainless steel:

right hand Art.-Nr. 4006-020102
left hand Art.-Nr. 4006-020103

Option:

Spacer 5 mm:
Art.-Nr. 4004-020010

Locking technology for cold storage

Edge-mounted hinge | Series 7514 | BONO

- Modern hinge for customised colour-schemes and highest standards
- For cold storage doors
- Adjustability in 3 dimensions
- Choice of rising and non-rising
- Left- and right-hinged doors
- Wide variety in surface finishes
- Coloured caps, removable
- Protection against unauthorized dismantling
- Spacers in 5 mm increments
- Door weight capacity of max. 80 kg using 2 hinges
- Material: Metal, zinc die-cast, plastic
- Caps of plastic

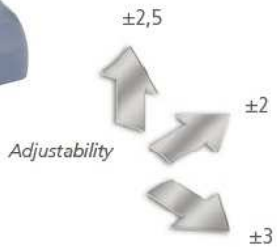

Surface finishes:

Chromium-plated:

right hand, rising	Art.-Nr. 7514-020070
left hand, rising	Art.-Nr. 7514-020071
right hand non-rising	Art.-Nr. 7514-020072
left hand non-rising	Art.-Nr. 7514-020073

Grey (RAL 7001):

right hand, rising	Art.-Nr. 7514-20080
left hand, rising	Art.-Nr. 7514-20081
right hand non-rising	Art.-Nr. 7514-02082
left hand non-rising	Art.-Nr. 7514-20083

Caps, single, grey:

right hand	Art.-Nr. 7514-020004
left hand	Art.-Nr. 7514-020005

Caps, single, black:

right hand	Art.-Nr. 7514-020006
left hand	Art.-Nr. 7514-020007

Caps, single, blue:

right hand	Art.-Nr. 7514-020008
left hand	Art.-Nr. 7514-020009

Option:

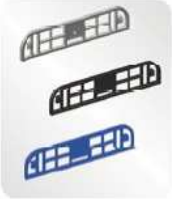

Spacer, 5 mm, grey:
Art.-Nr. 7514-020030

Spacer, 5 mm, black:
Art.-Nr. 7514-020031

Spacer, 5 mm, blue:
Art.-Nr. 7514-020032

Locking technology for cold storage

Plastic hinge | Series 4010 | LIFTO

- Plastic hinge in colored retro-look
- For cold storage doors
- Rising
- Adjustability in 2 dimensions
- Left- and right-hinged doors
- Lift-off capability
- Wide variety in surface finishes
- Coloured caps, removable
- Door weight capacity of max. 40 kg using 2 hinges
- Material: Lug, leaf, caps - plastic; Pin - galvanized steel

Adjustability

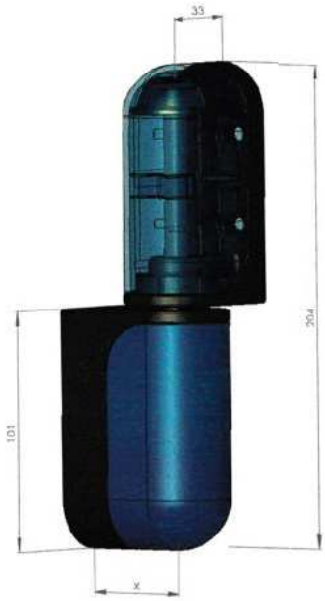

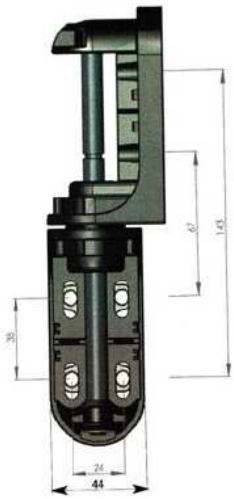

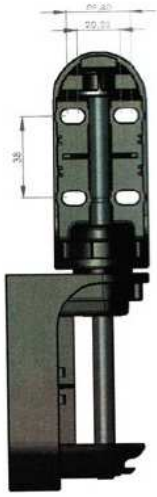

Plastic hinge:

Dimension X = 33 mm	Art.-Nr. 4010-020001
Dimension X = 45 mm	Art.-Nr. 4010-020002
Dimension X = 56 mm	Art.-Nr. 4010-020003

Caps:

grey	Art.-Nr. 4010-020010
blue	Art.-Nr. 4010-020011
black	Art.-Nr. 4010-020012

Locking technology for cold storage

Plastic hinge | Series 7805 | ARCTO

- Complementary hinge for multicolour latch system
- For cold storage doors
- Adjustable in 3 dimensions
- To be used with right- and left-hinged doors
- Lift-off capability for door maintenance
- Removable caps, coloured
- Door weight capacity max. 40 kg using 2 hinges
- Material:
  Lug, leaf, caps - plastic; Pin - stainless steel

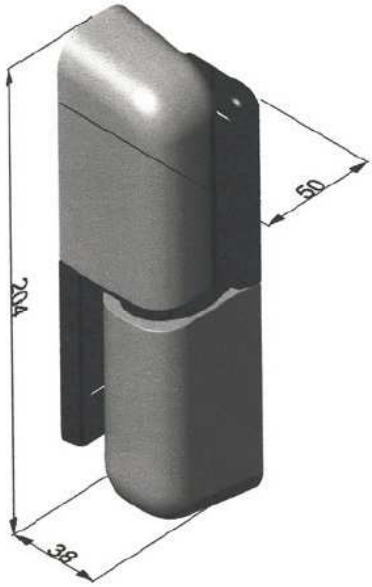

Plastic hinge:

Art.-Nr. 7805-020010

Option:

Spacer, 5 mm:

Art.-Nr. 7805-020005

Locking technology for cold storage

Leaf hinge | Series 4296

- High-performance hinge for high standards
- For cold storage doors and many more applications
- Rising
- Adjustability in 2 dimensions
- Door weight capacity max. 80 kg using 2 hinges
- Material: Zinc die-cast

Surface finishes*:

Black, left hand, rising:
A = 32 mm Art.-Nr. 4296-020021

Black, right hand, rising:
A = 32 mm Art.-Nr. 4296-020022

Grey (RAL 9007), left hand, rising:
A = 32 mm Art.-Nr. 4296-020011
A = 52 mm Art.-Nr. 4296-020013

Grey (RAL 9007), right hand, rising:
A = 32 mm Art.-Nr. 4296-020012
A = 52 mm Art.-Nr. 4296-020014

*Chromium plated upon request

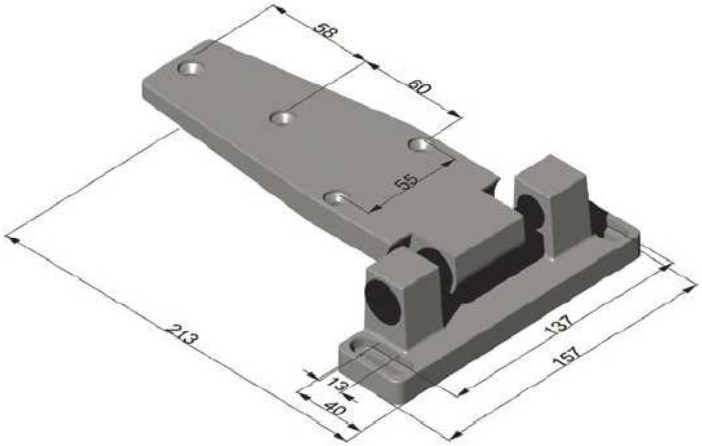

Option:

Spacer, 1 mm:
Art.-Nr. 4296-020050

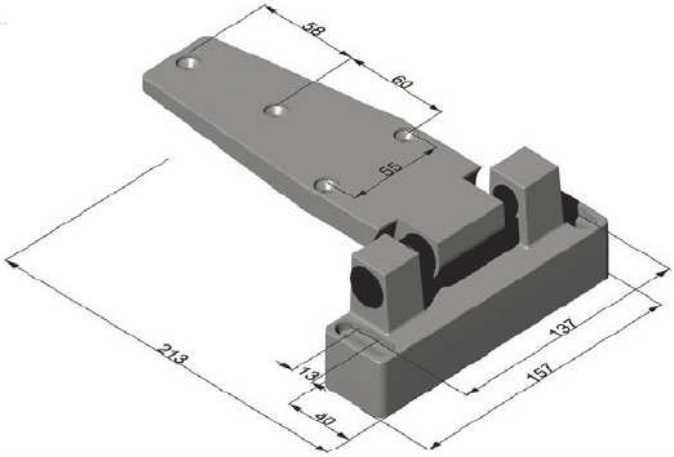

*Chromium plated upon request

NEU!

Locking technology for cold storage

Leaf hings | Series 4297

- High-performance hinge for flush doors
- For cold rooms and many more applications
- Rising
- Door weight capacity max. 80 kg using 2 hinges
- Material: Zinc die-cast

Surface finishes:

Chromium-plated, left hand rising:
Art.-Nr. 4297-020021

Chromium-plated, right hand rising:
Art.-Nr. 4297-020020

Grey (RAL 7001), left hand rising:
Art.-Nr. 4297-020011

Grey (RAL 7001), right hand rising:
Art.-Nr. 4297-020010

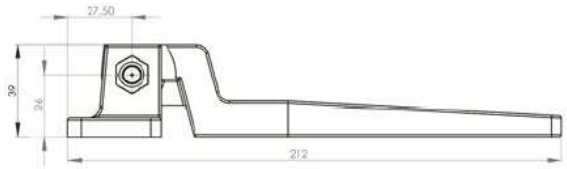

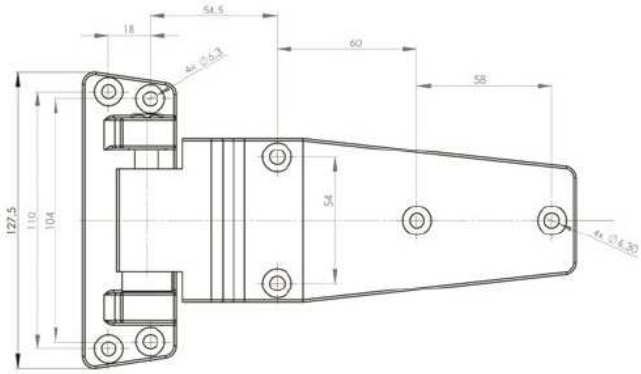

NEW!

Locking technology for cold storage

Leaf hinge | Series 5000

- Robust stainless steel hinge for flash doors
- For coldroom doors, service doors, fire proof doors a.o.
- Rising
- Lift-off/non lift-off
- Theft protection
- Adjustability in two dimension
- Door weight capacity of 80 kg or as heavy duty version 120 kg using 2 hinges
- Material: Stainless steel

Variations:

Lift-off hinge, right hand rising:
Art-Nr. 5000-020011

Lift-off hinge, left hand rising:
Art-Nr. 5000-020021

Non lift-off hinge:
right hand rising: Art.-Nr. 5000-020002

Non lift-off hinge:
left hand rising: Art.-Nr. 5000-020001

* heavy duty version upon request

Locking technology for cold storage

Hinge | Series 7902

- Simple hinge for universal use
- Ideal for export markets
- Chromium-plated
- For flush cold storage doors
- Door weight capacity of max. 30 kg using 2 hinges
- Material: Zinc die-cast

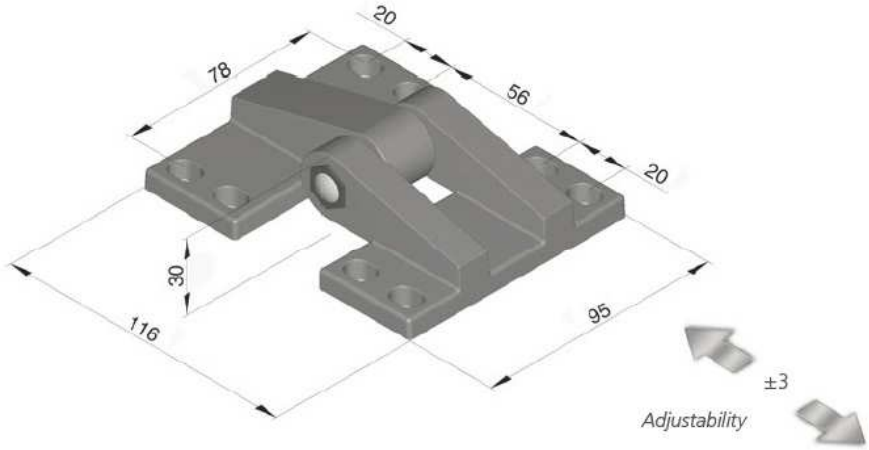

Hinge:

Chromium-plated:

Art.-Nr. 7902-020341

NEW!

Locking technology for cold storage

Pinlock (gas-tight) | Series 7150

- Solid, gas-tight latch for sliding doors
- For cold storage and other applications
- For door thicknesses 80 - 200 mm
- Ready for master key systems, KABA-Versions available
- Profile locking cylinder
- No freeze-ups due to gas-tight construction
- Material: Housing and pin - plastic

Example of use::

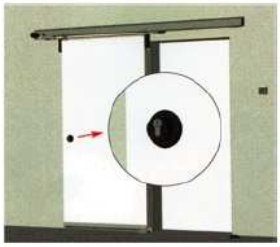

Pinlock :

X = 80 mm	Art.-Nr. 7150-020080
X = 100 mm	Art.-Nr. 7150-020100
X = 120 mm	Art.-Nr. 7150-020120
X = 140 mm	Art.-Nr. 7150-020140
X = 160 mm	Art.-Nr. 7150-020160

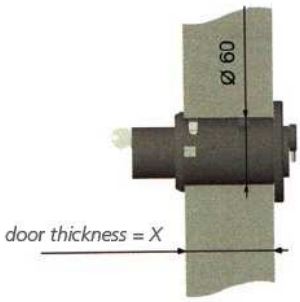

Option:

Status report (Reed-Switch):

X = 80 mm	Art.-Nr. 7150-020081
X = 100 mm	Art.-Nr. 7150-020101
X = 120 mm	Art.-Nr. 7150-020121
X = 140 mm	Art.-Nr. 7150-020141
X = 160 mm	Art.-Nr. 7150-020161

Status report (Reed switch) with 0,5 m wire*

Art.-Nr. 7150-020081

Spacer ring, 5 mm for adaptation to varying door thicknesses:

Art.-Nr. 7150-020005

*more versions upon request

Locking technology for refrigerated furnishings

Edge-mounted latches

6188

6190

6186

6201

6202

Surface-mounted latches

6180

6172

6183

6770

Leaf-hinges

4480

7900

Edge-mounted hinges

4500

4513

Cylinder locks

5801

5811

5812

Catch-locks

5710

Catch-locks

6195

Spring-loaded hinges

3653

4513

Camlocks

0253

Locking technology for refrigerated furnishings

Edge-mounted latch | Series 6188 | ERGO

- Self-closing latch with adjustable closing force
- For refrigerated furnishings, commercial refrigerators, cooling chambers, underbars and more
- Latch variations available for fulfillment of different safety regulations
- Available lockable or non-lockable
- Self-locking model available
- Wide variety of surface colouring
- Materials: Handle - zinc die-cast; Housing - zinc die-cast or plastic

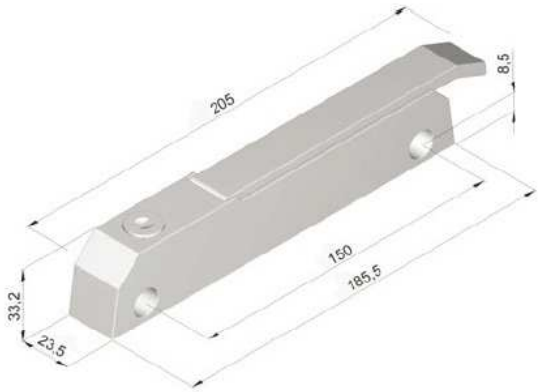

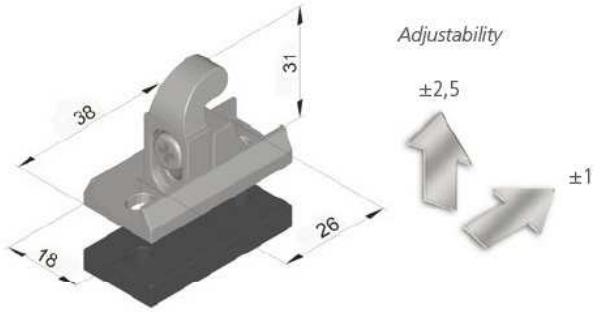

Surface variations:

Metal, chromium-plated:

lockable	Art-Nr. 6188-020251
non-lockable	Art-Nr. 6188-020252

Metal, powder-coated, RAL 9007:

lockable	Art-Nr. 6188-020250

Plastic/metal, black/chromium-plated:

lockable	Art-Nr. 6188-020225
non-lockable	Art-Nr. 6188-020224

Plastic/metal, black, RAL 9005:

lockable	Art-Nr. 6188-020226
non-lockable	Art-Nr. 6188-020223

Option:

Strike, adjustable:

Art-Nr. 6188-020207

Spacer, 5 mm:

Art-Nr. 6188-020208

Locking technology for refrigerated furnishings

Edge-mounted latch | Series 6190 | ERGO double-latch for drawers

- Self-closing double-latch with adjustable closing force
- For refrigerated furnishings and underbars
- Synchronised, easy handling
- Latch variations available for fulfillment of different safety regulations
- Available lockable or non-lockable
- Self-locking model available
- Wide variety of surface colouring
- Materials: Handle - zinc die-cast;
  Housing - zinc die-cast or plastic

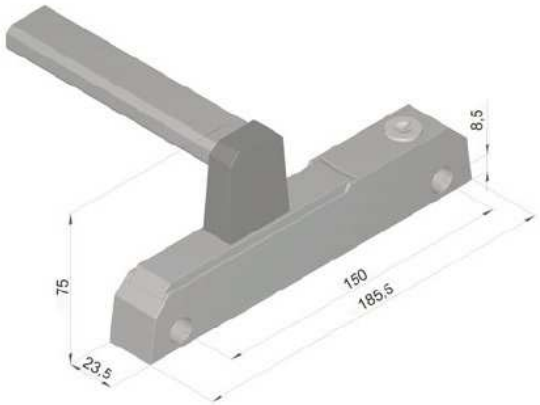

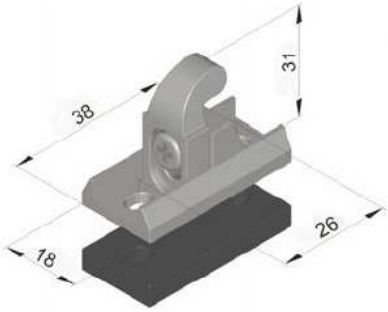

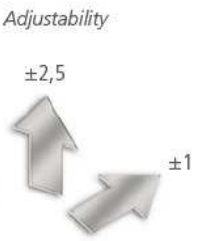

Surface variations:

Metal, chromium-plated:

lockable	Art-Nr. 6190-021023
non-lockable	Art-Nr. 6190-020998

Metal/plastic, grey, powder-coated, RAL 9007:

lockable	Art-Nr. 6190-021020
non-lockable	Art-Nr. 6190-020999

Plastic/metal, black/chromium-plated:

lockable	Art-Nr. 6190-021028
non-lockable	Art-Nr. 6190-021003

Metal (chromium-plated), black, RAL 9005:

lockable	Art-Nr. 6190-021026
non-lockable	Art-Nr. 6190-021000

Option:

Strike, adjustable:

Art-Nr. 6188-020207

Spacer, 5 mm:

Art-Nr. 6188-020208

Profile pipe, anodized aluminum

Upon request

Locking technology for refrigerated furnishings

Edge-mounted latch | Series 6186 | PRESTO

- Self-closing double-latch with push-button
- For refrigerated furnishings, commercial refrigeration, cooling chambers and underbars
- Self-locking
- Unlatches via push-button when locked
- Available lockable or non-lockable
- Materials:
  Housing - zinc die-cast;
  Push-button - zinc die-cast or plastic

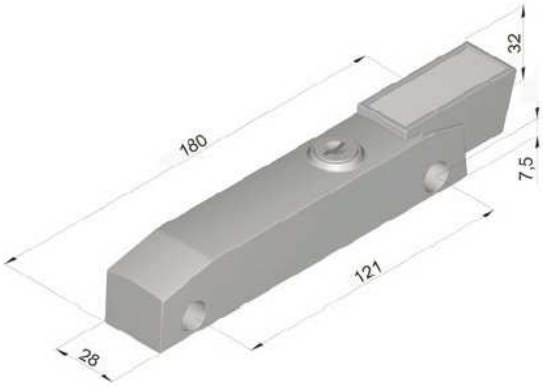

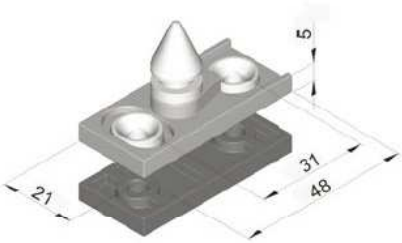

Adjustability

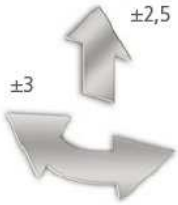

Surface variations:

Chromium-plated:

lockable	Art-Nr. 6186-020198
non-lockable	Art-Nr. 6186-020273

Chromium-plated/black:

lockable	Art-Nr. 6186-020298
non-lockable	Art-Nr. 6186-020297

Option:

Strike:

Art-Nr. 6186-020202

Spacer, 5 mm:

Art-Nr. 6186-020423

Locking technology for refrigerated furnishings

Edge-mounted latch | Series 6201 | DUPLO

- Self-closing latching system
- For refrigerated furnishings, commercial refrigeration, cooling chambers, underbars and many more applications
- Latch variations available for fulfillment of different safety regulations
- Wide variety of surface colouring
- Materials:
  Housing - zinc die-cast;
  Strike - stainless steel

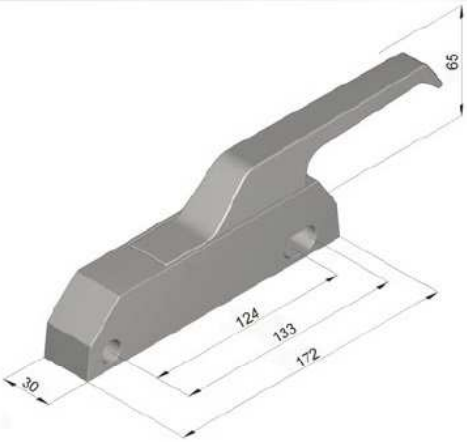

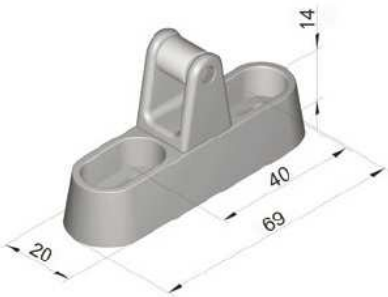

Adjustability

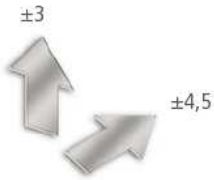

Edge-mount latch including strike:

Chromium-plated:

Art-Nr. 6201-020001

Edge-mount latch including strike:

Chromium-plated/red:

Art-Nr. 6201-020001

Option:

Strike:

Art-Nr. 6200-020921

Locking technology for refrigerated furnishings

Edge-mounted latch | Series 6202 | MAGNETO

- Self-closing latch with variable closing force
- For trolleys, refrigerated furnishings, hinged doors/hatches, drawers and more
- Magnetic latching system
- Closing force 150N, 300N and 450N available
- Different surface finishes available *
- Material:
  Handle and housing - cathodic dip painted (black);
  Washer - plastic

Edge-mounted latch with push-off mechanism:

Art-Nr. 6202-020100

Option:

Washer:

Art-Nr. 6202-020090

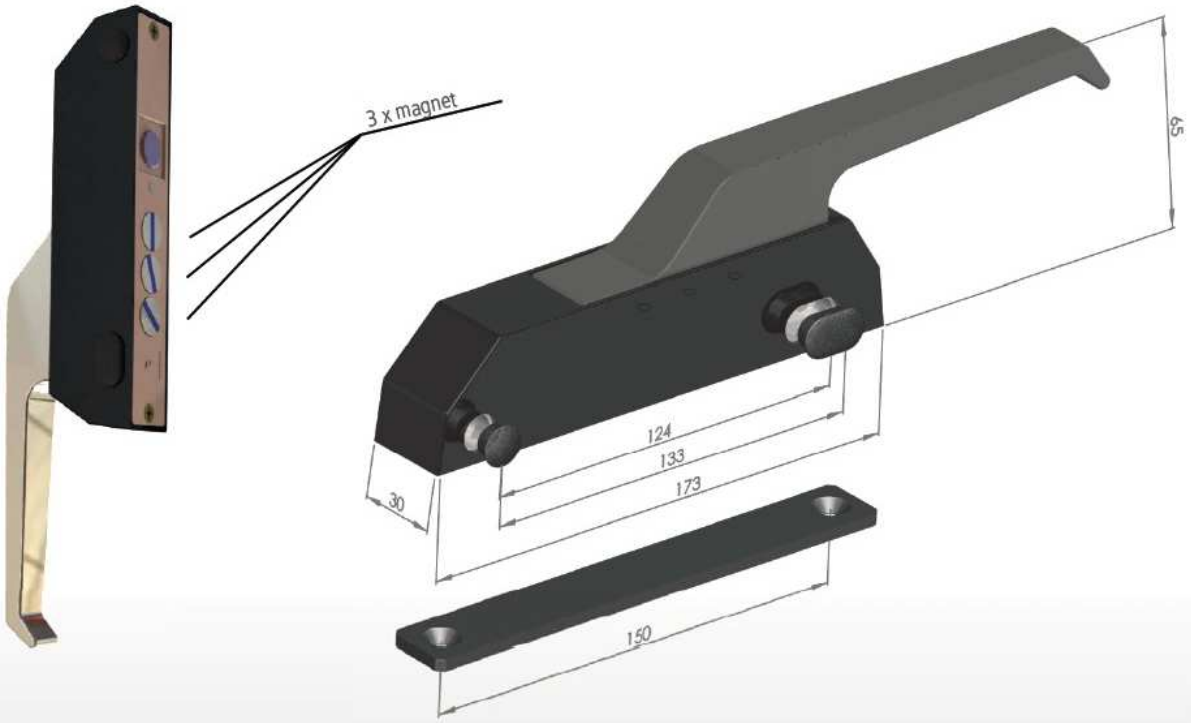

*Further options in closing force and surface finish upon request

Locking technology for refrigerated furnishings

Surface-mounted latches | 6180, 6172, 6183

- Self-closing latch in classic design
- For refrigerated furnishings, commercial refrigerators, cooling chambers and many more applications
- Latching only with closed door
- Chromium-plated
- Ergonomic handling
- Available lockable and non-lockable
- Metal / zinc die-cast
- All strikers adjustable in height

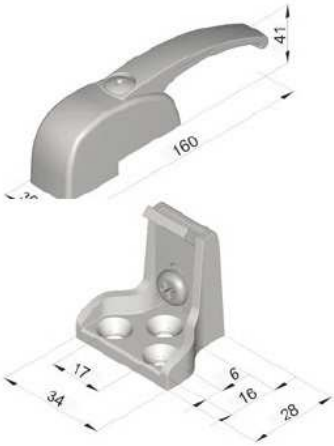

Chromium-plated, lockable:

Art-Nr. 6180-020001

Strike, adjustable:

Art-Nr. 6180-020002

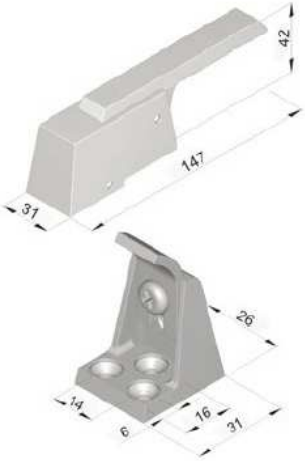

Chromium-plated, non-lockable:

Art-Nr. 6172-020167

Strike, adjustable:

Art-Nr. 6172-020169

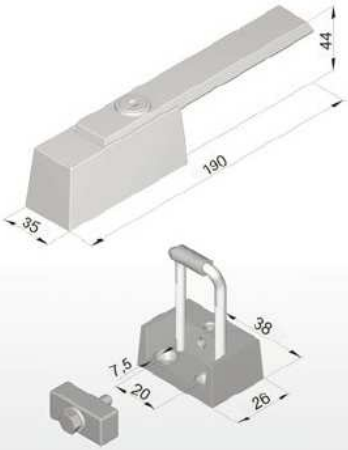

Chromium-plated, lockable:

Art-Nr. 6183-020180

Strike, adjustable:

Art-Nr. 6183-020185

Locking technology for refrigerated furnishings

Surface-mounted latch | Series 6770

- Sturdy, self-closing latching system with increased closing force
- For refrigerated furnishings, commercial refrigeration, cooling chambers and more
- Latch for high demands
- Chromium-plated
- Strike adjustable in height
- Material: Zinc die-cast

Latch, metal, chromium-plated:

Art-Nr. 6770-020211

Strike, metal, chromium-plated:

Art-Nr. 6770-020212

Locking technology for refrigerated furnishings

Hinge | Series 4480

- Classic, sturdy hinge for high demands
- For refrigerated furnishings, underbars and more
- To be used for left- and right-hinged doors
- Available for varying door offset dimensions
- Door weight capacity of max. 25 kg (2 hinges)
- Chromium-plated
- Material: Metal / Zinc die-cast

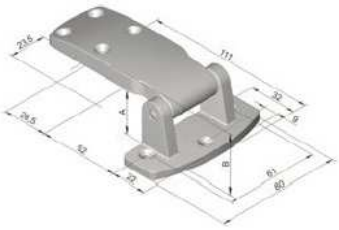

Hinge, metal:

offset 20 mm / total height 30 mm
Art-Nr. 4480-020060

offset 24 mm / total height 34 mm
Art-Nr. 4480-020062

offset 28 mm / total height 38 mm
Art-Nr. 4480-020064

Option:

Spacer for lug, 2 mm:

Art-Nr. 4480-140054

Hinge | Series 7900

- For flush doors
- For refrigerated furnishings, underbars and more
- To be used for left- and right-hinged doors
- Available for varying door offset dimensions
- Door weight capacity of max. 25 kg (2 hinges)
- Chromium-plated
- Material: Metal / Zinc die-cast

Hinge, metal:

Art-Nr. 7900-020016

Locking technology for refrigerated furnishings

Edge-mounted hinge | Series 4500

- Edge-mounted door hinge in modern and classy design
- For refrigerated furnishings, underbars and many more applications
- Quick and easy assembly
- Available for varying door offset dimensions
- Wide variety in surface colouring
- Protection against unauthorized dismantling
- To be used for left- and right-hinged doors
- Door weight capacity of max. 25 kg (2 hinges)
- Material: Lug/Leaf - metal / zinc die-cast;
  Caps - plastic, black

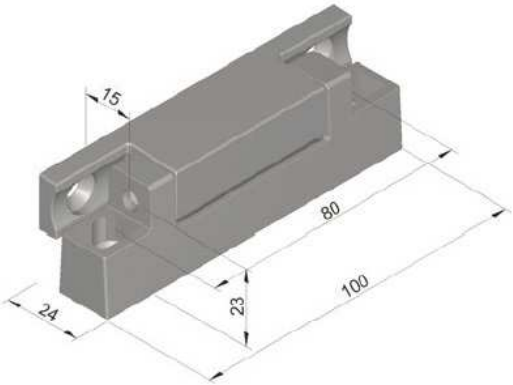

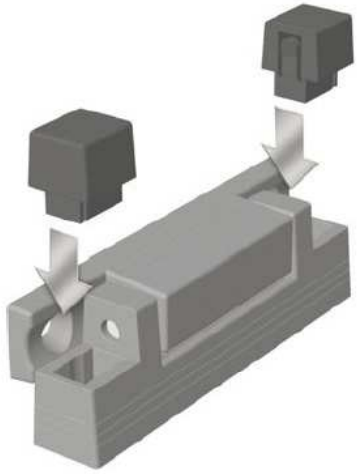

Surface variations:

Black:

Art-Nr. 4500-020410

Chromium-plated (roto-finish):

Art-Nr. 4500-020420

Chromium-plated:

Art-Nr. 4500-020430

Option:

Spacer, plastic, 6 mm:

Art-Nr. 4500-020404

Locking technology for refrigerated furnishings

Edge-mounted hinge / Spring-loaded hinge | Series 4513

- Edge-mounted hinge with optional self-closing assistance
- For refrigerated furnishings, underbars and more
- Quick and easy assembly
- Protection against unauthorized dismantling
- To be used for left- and right-hinged doors
- Spring-loaded hinge self-closes when door is open 45° or less
- Door weight capacity of max. 20 kg (2 hinges)
- Wide variety of surface colourings
- Material: Hinge - plastic (weatherproof);
  Springs - stainless steel

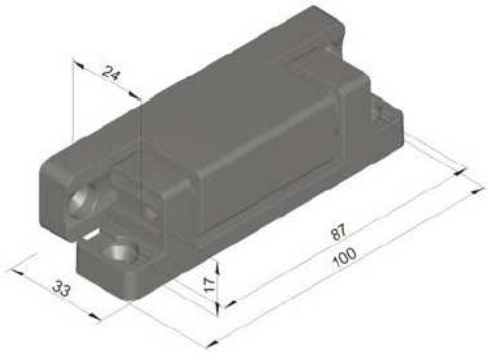

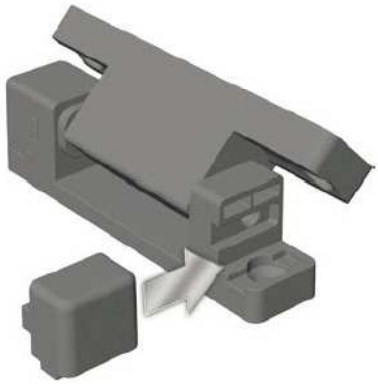

Variations:

Black, spring-loaded:

Art-Nr. 4513-020650

Black, without spring:

Art-Nr. 4513-020651

Option:

Spacer, 4,5 mm:

Art-Nr. 4513-020652

Locking technology for refrigerated furnishings

Cylinder-lock | Series 5801

- Modular locking-system
- For refrigerated furnishings, commercial refrigerators, underbars and more
- Available for different door thicknesses
- Quick and easy assembly
- Different lockings available
- Materials: Housing - metal; Pipe-nut - plastic; Locking detent - plastic

Cylinder system:

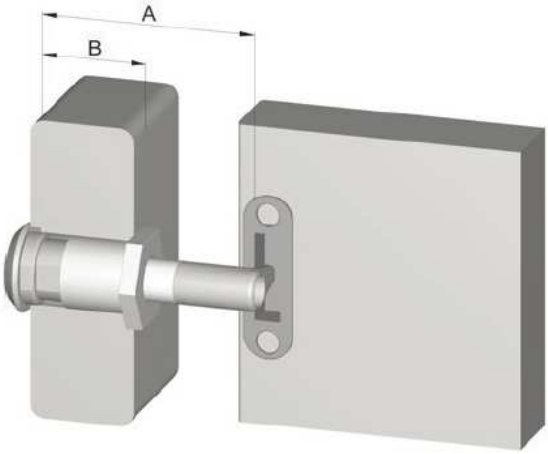

hole pattern

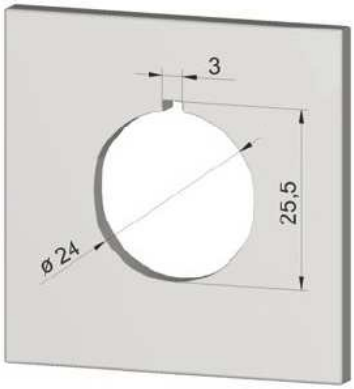

Cylinder-lock:

Chromium-plated:

Art-Nr. 5801-020833

Locking detent:

Plastic:

Art-Nr. 5802-010161

Pipe-nut:

B = 29 - 32 mm:	Art-Nr. 5801-020828
B = 35 - 42 mm:	Art-Nr. 5801-020829
B = 42 - 49 mm:	Art-Nr. 5801-020830
B = 49 - 56 mm:	Art-Nr. 5801-020831
B = 56 - 63 mm:	Art-Nr. 5801-020832

Locking bolt:

A = 85 mm	Art-Nr. 5983-020636
A = 82,5 mm	Art-Nr. 5983-020647
A = 78,5 mm	Art-Nr. 5983-020633
A = 72,5 mm	Art-Nr. 5983-020646
A = 65 mm	Art-Nr. 5983-020648
A = 55,5 mm	Art-Nr. 5801-020827

Locking technology for refrigerated furnishings

Door- and drawer lock | Series 5811

- Sturdy, latching system
- For doors and drawers
- Chromium-plated
- To be used with right- and left-hinged doors
- Protected against unauthorized dismantling
- Key can be removed in "open" and "closed" positions
- Material: Zinc die-cast

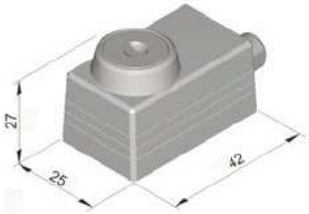

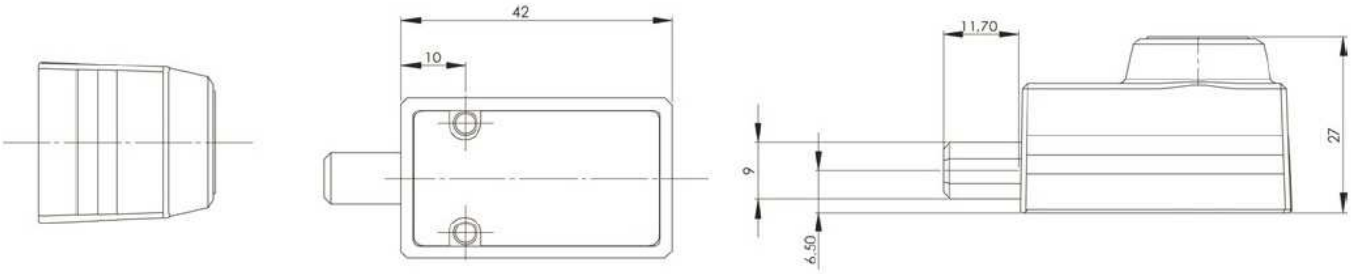

Options for installation::

Door- and drawer lock:

Chromium-plated (roto-finish):

Art-Nr. 5811-020001

Locking technology for refrigerated furnishings

Door- and drawer lock | Series 5812

- For doors and drawers
- Quick and easy assembly
- Wide variety of surface colourings
- To be used with right- and left-hinged doors
- Material:
  Zinc-die-cast;
  Cover plugs - plastic

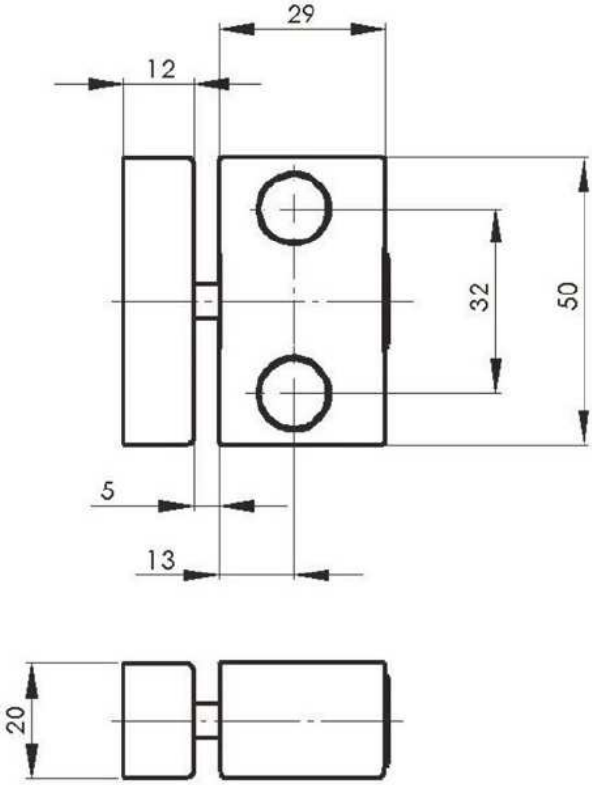

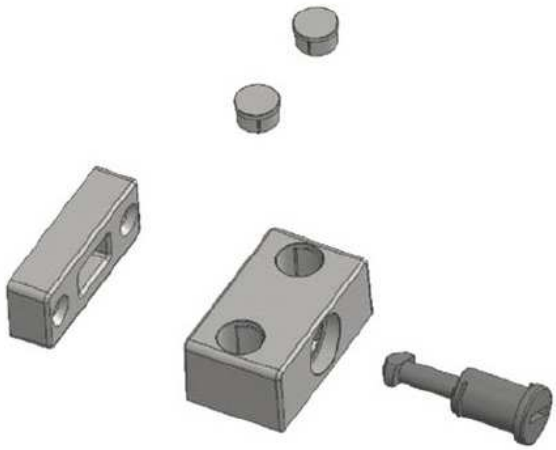

Door- and drawer lock:

Powder-coated, silver (anodized):

Art-Nr. 5812-020010

Locking technology for refrigerated furnishings

Spring-loaded catch | Series 5710

- Self-closing latch for invisible installation
- Ideal for "clean front" designs
- For drawers and other applications
- Also closes with catch in closed position
- Material:
  Catch mechanism - galvanized steel / plastic;
  Cover - plastic;
  Strike - galvanized steel / plastic

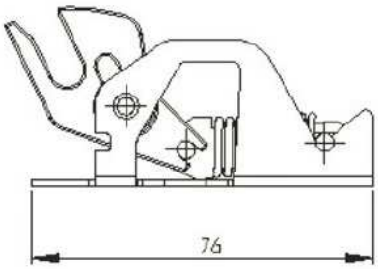

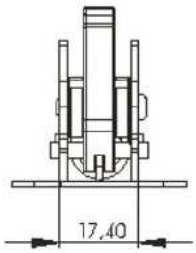

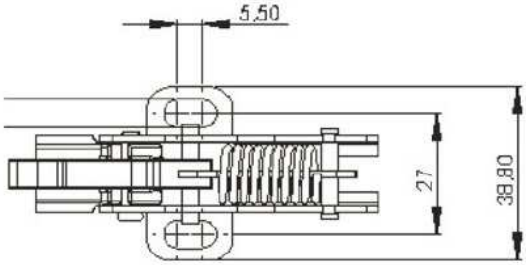

Cover, plastic:

Art-Nr. 5710-020055

Spring-loaded catch:

Art-Nr. 5710-020050

Option:

Strike:

18 mm	Art-Nr. 5710-020060
25,5 mm	Art-Nr. 5710-020070
33,5 mm	Art-Nr. 5710-020075

Locking technology for refrigerated furnishings

Inside latch | Series 6195 - double ball catch

- Classic, space-saving catch-lock
- Universal use
- Catch-functionality through spring-loaded balls
- Adjustable locking-force
- Solid brass-strike
- Material: Brass, galvanized or uncoated

Size 1:	Size 2:	Size 3:
A = 28.5 mm	A = 37 mm	A = 42 mm
B = 20 mm	B = 28 mm	B = 30 mm
C = 41 mm	C = 50 mm	C = 57 mm
D = 49 mm	D = 59 mm	D = 69 mm
E = 13 mm	E = 15 mm	E = 20 mm
F = 11 mm	F = 13 mm	F = 15 mm
G = 9 mm	G = 11.5 mm	G = 12.5 mm
H = 6 mm	H = 7 mm	H = 9 mm
I = 11.3 mm	I = 13 mm	I = 15 mm
J = 7 mm	J = 8 mm	J = 9 mm
K = 8.5 mm	K = 11.5 mm	K = 12.5 mm

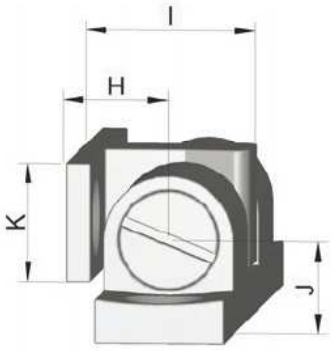

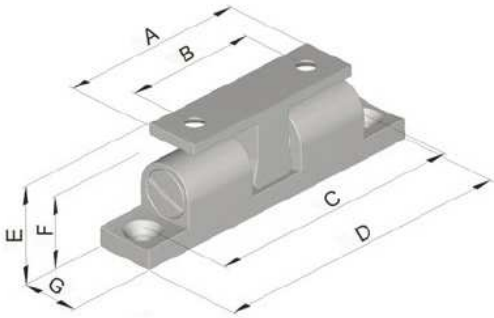

Surface variations:

Brass, uncoated:

size 1 – Art.-Nr. 6195-041900
size 2 – Art.-Nr. 6195-041902
size 3 – Art.-Nr. 6195-041904

Brass, galvanized:

size 1 – Art.-Nr. 6195-041901
size 2 – Art.-Nr. 6195-041903
size 3 – Art.-Nr. 6195-041905

Locking technology for refrigerated furnishings

Spring-loaded cartridge hinge | Series 3653 | DREMO

- Hinge-system with integrated self-closing functionality
- For commercial refrigerators
- To be used with right- and left-hinged doors
- Self-closing
- Cartridge and step bearing to be foamed inside the door leaf
- Track bearing adjustable horizontally and vertically
- Opening angle 180°
- Material: Bearing - metal/zinc die-cast;
  Door bearing sleeve, bushings and spacer disc - plastic

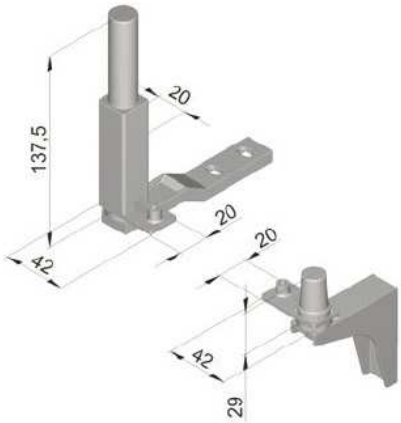

Components:

Spring-loaded cartridge, metal:

Art-Nr. 3653-020616

Door bearing, metal:

Art-Nr. 3653-020617

Door bearing sleeve:

Art-Nr. 3653-020518

Washer, brass:

Art-Nr. 3653-020516

Spacer disc, plastic:

Art-Nr. 3653-020517

Bear bushing, plastic:

Art-Nr. 3653-020519

Upper step bearing, metal:

Art-Nr. 3653-020618

Bottom step bearing, metal:

Art-Nr. 3653-020619

Locking technology for refrigerated furnishings

Camlock | Series 0253

- Economy-minded latching system for flexible assembly of foamed wall-panels
- Lasting tightening force through cam-action
- Tightening hook safely secured for transport
- Suitable for multiple assembly and dismantling
- Material: Housing - plastic;
  Mechanical parts - steel / zinc die-cast

Clamping element

Counter part

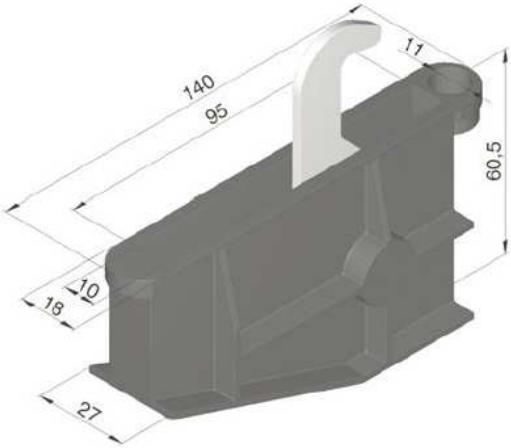

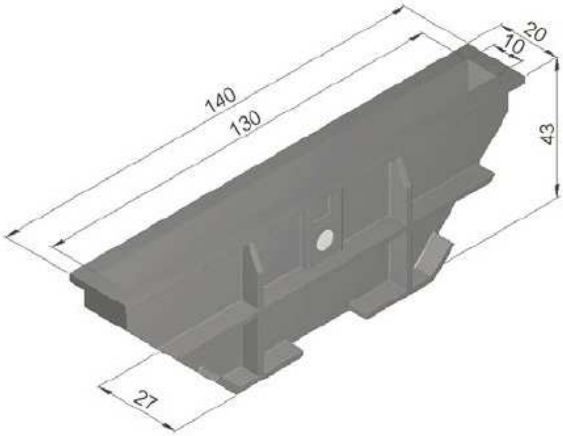

Camlock:

Clamping element:

Art-Nr. 0253-020001

Counter part:

Art-Nr. 0253-020002

Hardware for heated applications

Latching mechanism

6303

6334

6339

Pendulum latch

6303

6333

Cam-action latch

6302

Pressing lever latch

6300

6300

Drive bolt latches

0751

0753

6337

Handle option

6351

Edge-mounted latches

6200

6202

6188

Electro-magnetic latches

8440

8410

Electro-motoric latches

8800

Edge-mounted hinge

4500

Strike blocking unit for access control

6311

Anitbacterial handle-surfaces

NEW!
Latching mechanism
Series 6339

NEW!

Hardware for heated applications

NEW | Latching mechanism | Series 6339

- Central one-point locking system with high gasket pressure
- Ideal for table devices and stand alone applications
- Pull-to-shut function of up to 7 mm
- Two-step opening for safety vent position
- Compact built for safe spaceing option
- Complementary handle to 6334 and 6337 series
- Left and right hand available
- Handle customization upon request.
- Material:
  - Stainless steel
  - Zinc dye-cast
  - Plastic

Locking variations:

1-step

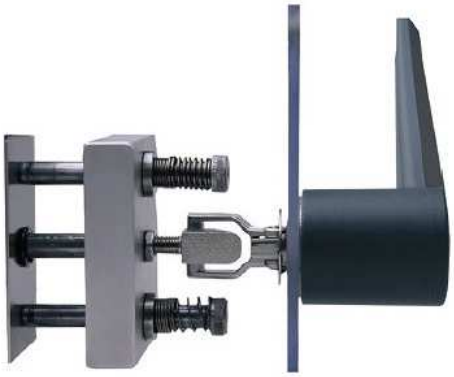

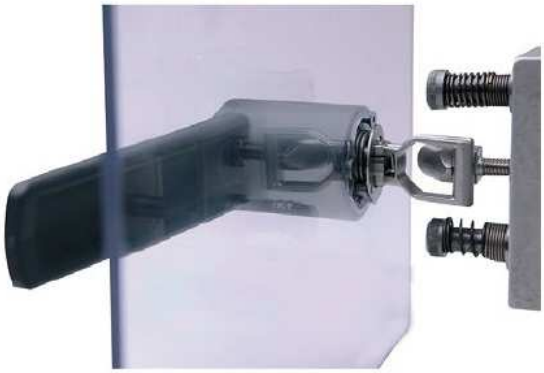

Variations:

Latching mechanism, mounted, back:

Art.-Nr. 6339-020001

Stand alone unit latch, left hand, handle grey:

Art.-Nr. 6339-020002

Options:

Strike, 2-step, opening:

Art.-Nr. 6303-020022

Hygiene insert:

Art.-Nr. 6333-020500

NEW!

Drive bolt latch

Series 6337

NEW!

Hardware for heated applications

Drive bolt latch | Series 6337

- Two-point locking system containing stainless steel components for more endurance and temperatur critical enduses
- For table devices and particulary for stand alone appliances
- Seamless power transmission through drive bolt technique and reinforces gear
- Safety vent position
- Low abraision of the components besides high gasket pressure
- Easy door closing
- Hygiene comfort
- Complementary handle to 6334 and 6339 series
- Handle customization upon request

- Material:
  - Stainless steel
  - Zinc dye-cast
  - Plastic

Variations:

Handle, front mounted right hand:

Art.-Nr. 6337-0200110

Handle, front mounted left hand:

Art.-Nr. 6337-0200111

Strike:

Art.-Nr. 6337-020300

Gear unit:

Art.-Nr. 6337-020010

Drive bolt element:

Art.-Nr. 6337-020050

Optional:

Square bar pin,
variable length*

* Upon request

NEW!
Strike blocking unit
Series 6311

NEW!

Hardware for heated applications

Strike blocking unit | access control | 6311

- Space-saving installation options
- Blocks against unauthorized opening during operation
- Inhibits circumvention of safety-related functions
- 1- or 2-step opening
- Ideal for temperature-critical installation
- Adaptable / upgradable to system 6303, 6333 and 6334
- Material: Stainless steel

Strike blocking unit 6V

One-step opening: Art-Nr. 6311-020010
two-step opening: Art-Nr. 6311-020011

IWO group

FEEL THE SERVICE!

www.iwogroup.eu sales@iwogroup.eu tel.: +420 602 558 254

Hardware for heated applications

Latching mechanism | Series 6303

- Self-closing latch
- Universal use
- 1- or 2-step opening
- Wire bracket in varying lengths depending on door thickness
- Fine adjustment via strike thread
- Handle can be customized upon request
- Material:
  Housing - zinc die-cast;
  Axles - zinc die-cast;
  Bushing - plastic;
  Wire bracket - stainless steel;
  Strike - stainless steel

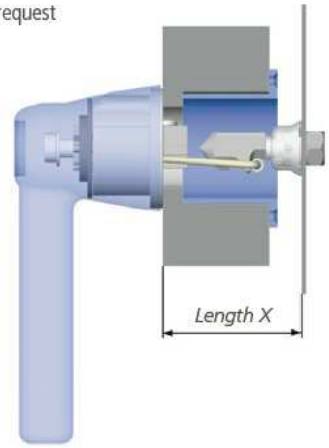

Locking variations:

1-step

2-step

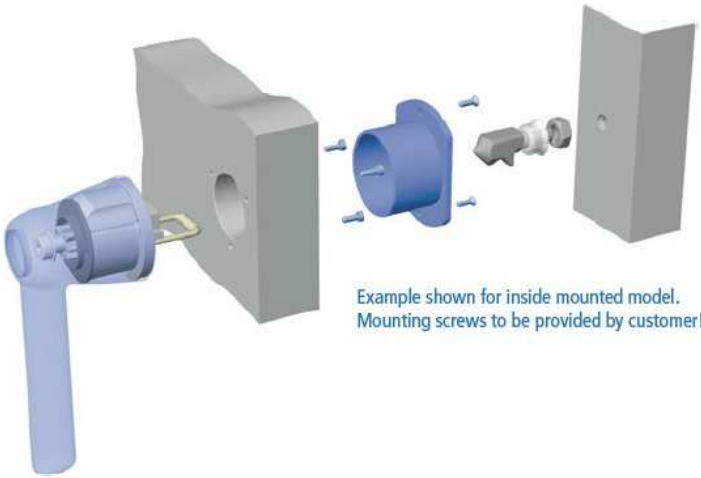

Example shown for inside mounted model.
Mounting screws to be provided by customer!

Variations:

Housing, metal:

Length X = 59 - 69 mm	Art.-Nr. 6303-020500
Length X = 66 - 76 mm	Art.-Nr. 6303-020501
Length X = 81 - 91 mm	Art.-Nr. 6303-020502

Option:

Strike, 1-step opening:

Art.-Nr. 6303-020022

Strike, 2-step opening:

Art.-Nr. 6303-020030

NEW!

Hardware for heated applications

Latching mechanism | Series 6334

- Enhanced functionality for self-closing latches
- More endurance with high gasket-pressure
- Compact size for narrow door-profiles
- Resistant against agressive climate
- Optional with adapter for 6 mm or 8 mm glass doors
- Locking lever in varying lenght depending on door thickness
- Fine-adjustment via strike thread
- Handle can be customized upon reques
- 1- or 2-step opening
- Universal use
- Material:
  Housing - zinc die-cast;
  Handle - plastic;
  Axles - zinc die-cast;
  Locking lever - stainless steel;
  Strike - stainless steel

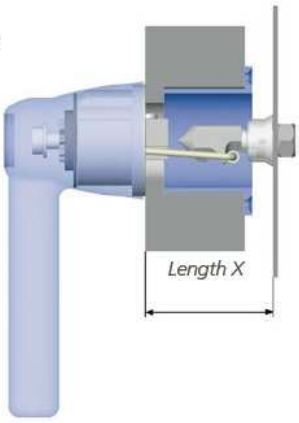

Locking variations:

1-step

2-step

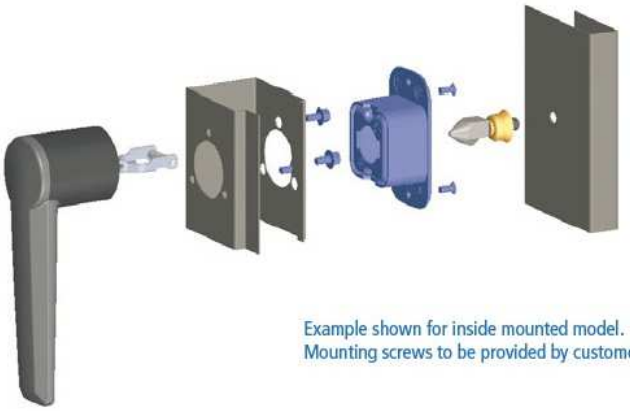

Example shown for inside mounted model.
Mounting screws to be provided by customer!

Variations:

Latching mechanism, without handle:

Length X = 50.0 - 60.0 mm	Art-Nr. 6334-020010
Length X = 55.0 - 65.0 mm	Art-Nr. 6334-020015
Length X = 61.5 - 71.5 mm	Art-Nr. 6334-020020
Length X = 69.5 - 79.5 mm	Art-Nr. 6334-020025

Latching mechanism, with handle:

Length X = 50.0 - 60.0 mm	Art-Nr. 6334-020050
Length X = 55.0 - 65.0 mm	Art-Nr. 6334-020055
Length X = 61.5 - 71.5 mm	Art-Nr. 6334-020060
Length X = 69.5 - 79.5 mm	Art-Nr. 6334-020065

Option:

Strike, 1-step opening:

Art-Nr. 6303-020022

Strike, 2-step opening:

Art-Nr. 6303-020030

Hygiene insert:

Art.-Nr. 6333-020500

NEW!

Hardware for heated applications

NEW | Latching mechanism | Series 6339

- Central one-point locking system with high gasket pressure
- Ideal for table devices and stand alone applications
- Pull-to-shut function of up to 7 mm
- Two-step opening for safety vent position
- Compact built for safe spaceing option
- Complementary handle to 6334 and 6337 series
- Left and right hand available
- Handle customization upon request.
- Material:
  - Stainless steel
  - Zinc dye-cast
  - Plastic

Variations:

Latching mechanism, mounted, back:

Art.-Nr. 6339-020001

Stand alone unit latch, left hand,handle grey:

Art.-Nr. 6339-020002

Options:

Strike, 2-step, opening:

Art.-Nr. 6303-020022

Hygiene insert:

Art.-Nr. 6333-020500

Hardware for heated applications

Pendulum latch | Series 6303

- Self-closing
- Can be mounted from the front or the inside of the oven door
- 1- or 2-step opening
- Wire bracket in varying lenghts depending on door thickness
- Handle can be customised upon request
- Fine-adjustment via strike thread
- Material:
  Housing - zinc die-cast;
  Handle - plastic;
  Axles - zinc die-cast;
  Wire bracket - stainless steel;
  Strike - stainless steel

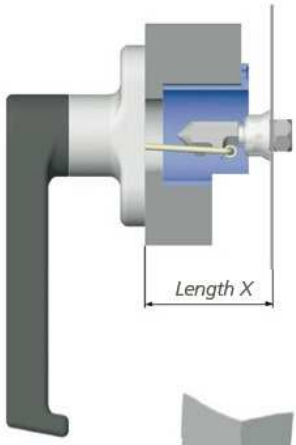

Locking variations:

1-step

2-step

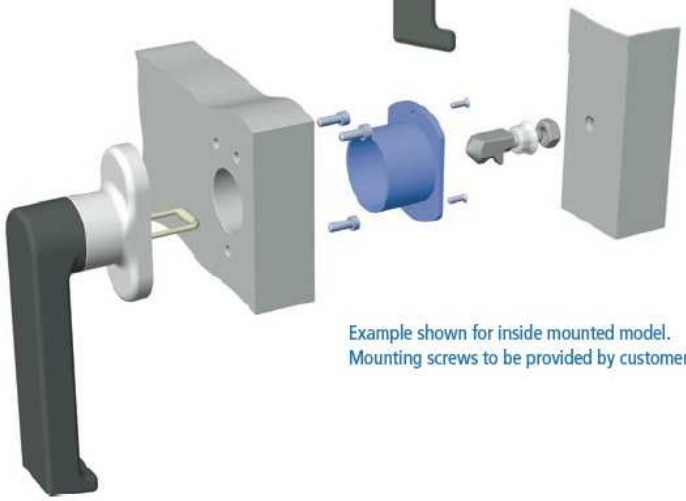

Example shown for inside mounted model.
Mounting screws to be provided by customer!

Variations:

Pendulum latch, for inside mounting:

Length X = 47 - 57 mm Art.-Nr. 6303-020015
Length X = 54 - 64 mm Art.-Nr. 6303-020016
Length X = 69 - 79 mm Art.-Nr. 6303-020017

Pendulum latch, for front mounting:

Length X = 47 - 57 mm Art.-Nr. 6303-020010
Length X = 54 - 64 mm Art.-Nr. 6303-020011
Length X = 69 - 79 mm Art.-Nr. 6303-020012

Option:

Strike, 1-step opening:

Art.-Nr. 6303-020022

Strike, 2-step opening:

Art.-Nr. 6303-020030

NEW!

Hardware for heated applications

Pendulum latch | Series 6333

- Enhanced functionality for self-closing latches
- More endurance with high gasket-pressure
- Resistant against agressive climate
- Ergonomic handle
- Locking lever in varying lenght depending on door thickness
- Fine-adjustment via strike thread
- Handle can be customized upon request
- 1- or 2-step opening
- Universal use
- Can be mounted from front or inside
- Material:
  Housing - zinc die-cast;
  Handle - plastic;
  Axles - zinc die-cast;
  Locking lever - stainless steel;
  Strike - stainless steel

Locking variations:

1-step

2-step

Example shown for inside mounted model.
Mounting screws to be provided by customer!

Variations:

Pendulum latch, for inside door mounting:

Length X = 41.5 - 51.5 mm	Art-Nr. 6333-020010
Length X = 45.0 - 55.0 mm	Art-Nr. 6333-020015
Length X = 51.5 - 61.5 mm	Art-Nr. 6333-020020
Length X = 59.5 - 69.5 mm	Art-Nr. 6333-020025

Pendulum latch, for frontside door mounting:

Length X = 41.5 - 51.5 mm	Art-Nr. 6333-020050
Length X = 45.0 - 55.0 mm	Art-Nr. 6333-020055
Length X = 51.5 - 61.5 mm	Art-Nr. 6333-020060
Length X = 59.5 - 69.5 mm	Art-Nr. 6333-020065

Option:

Strike, 1-step opening:

Art-Nr. 6303-020022

Strike, 2-step opening:

Art-Nr. 6303-020030

Hygiene insert:

Art.-Nr. 6333-020500

Hardware for heated applications

Cam-action latch | Series 6302

- Easy handling of high gasket pressure
- Can be mounted from the frontside or the inside of the oven door
- Compressing distance 4 mm
- Fine adjustment via strike thread
- Handle customisation upon request
- Material:

  Handle - plastic;

  Housing - zinc die-cast, chromium-plated or powder coated;

  Axles - zinc die-cast;

  Cam - stainless steel;

  Strike - stainless steel;

Variations:

Cam-action latch,
inside mounted, left hand:

Art.-Nr. 6302-020020

Cam-action latch,
frontside mounted, left hand:

Art.-Nr. 6302-020060

Cam-action latch,
inside mounted, right hand:

Art.-Nr. 6302-020010

Cam-action latch,
frontside mounted, right hand:

Art.-Nr. 6302-020050

Option:

Strike:

Art.-Nr. 6302-020030

Hardware for heated applications

Press lever latch | Series 6300

- Easy handling of high gasket pressure
- Compressing distance 8 mm
- 2-step incremental mechanism
- Visible surfaces chromium-plated
- Handle customisation upon request
- Material:
  Housing - zinc die-cast, chromium-plated;
  Handle - plastic;
  Axles - zinc die-cast;
  Strike - zinc die-cast

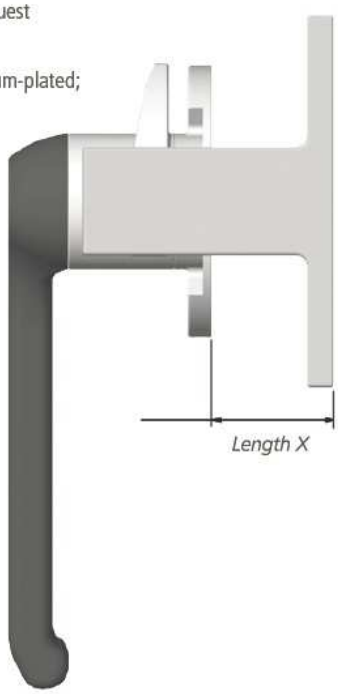

Variations:

Press lever latch, right hand:

Art.-Nr. 6300-020001

Press lever latch, left hand:

Art.-Nr. 6300-020002

Option:

Strike, right hand:

Length X = 20 mm Art.-Nr. 6300-020005
Length X = 38 mm Art.-Nr. 1750-010162

Strike, left hand:

Length X = 20 mm Art.-Nr. 6300-020004
Length X = 38 mm Art.-Nr. 1750-010161

Decorative plug:

black	Art.-Nr. 6300-020013
blue	Art.-Nr. 6300-020014
red	Art.-Nr. 6300-020010
green	Art.-Nr. 6300-020011

Hardware for heated applications

Press lever latch | Series 6300

- Complementary handle variation to 6302, 6303, 6351

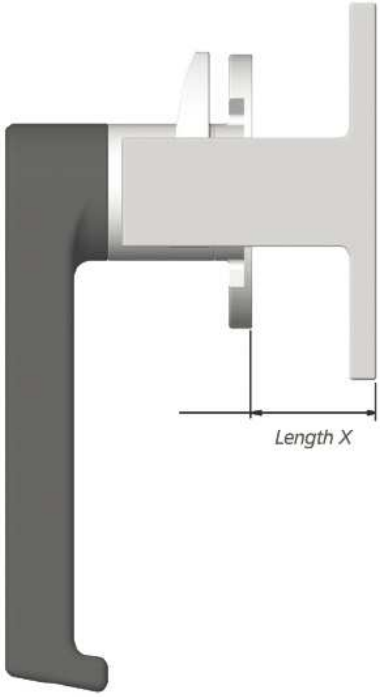

Variations:

Press lever latch, right hand:

Art.-Nr. 6300-020200

Press lever latch, left hand:

Art.-Nr. 6300-020201

Option:

Strike, right hand:

Length X = 20 mm Art.-Nr. 6300-020005
Length X = 38 mm Art.-Nr. 1750-010162

Strike, left hand:

Length X = 20 mm Art.-Nr. 6300-020004
Length X = 38 mm Art.-Nr. 1750-010161

Hardware for heated applications

Drive bolt latch | Series 0751

All components printed in blue are options! (pipe 10 x 1 not in scope of supply)
Mounting screws to be provided by customer!

- Ideal for large doors
- 2-point latching
- 2-step-opening
- Smooth power transmission through reinforced gear
- Variable height by cut-to-length connections
- Complementary handle design to 6300-6302,6303
- Material:
  Handle - plastic, black;
  Housing - zinc die-cast;
  Axles - zinc die-cast;
  Strike - zinc die-cast

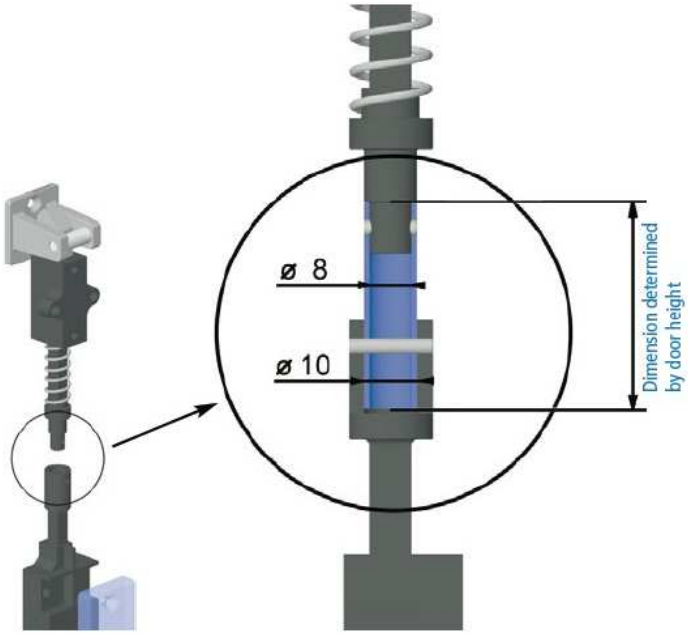

Variations:

Gear unit:

right hand Art.-Nr. 0751-020942
left hand Art.-Nr. 0751-020941

Bolting element:

Art.-Nr. 0751-020943

Strike:

Art.-Nr. 0751-010218

Option:

Handle, frontside mounted:

right hand Art.-Nr. 6351-020002
left hand Art.-Nr. 6351-020001

Spacer for gear unit:

Art.-Nr. 0751-020944

Spacer for bolting element:

Art.-Nr. 0751-020944

Hardware for heated applications

Drive bolt latch | Series 0753

All components printed in blue are options! (pipe 10 x 1 not in scope of supply)
Mounting screws to be provided by customer!

- Ideal for large doors
- 2-point latching
- 2-step-opening
- System solution for economic door structure
- Variable height by cut-to-length connections
- Material:
  Handle - plastic, black;
  Housing - zinc die-cast;
  Axles - zinc die-cast;
  Strike - zinc die-cast

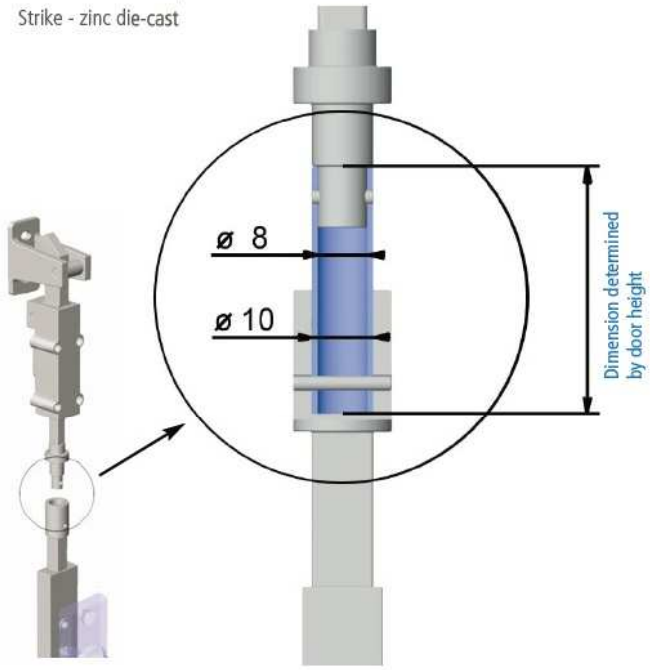

Variations:

Gear unit:

Art.-Nr. 0753-020377

Drive bolt element:

Art.-Nr. 0753-020379

Strike:

Art.-Nr. 0753-020378

Option:

Handle, frontside mounted, right hand*:

Handle, frontside mounted, left hand*:

* Upon request

NEW!

Hardware for heated applications

Drive bolt latch | Series 6337

- Two-point locking system containing stainless steel components for more endurance and temperatur critical enduses
- For table devices and particulary for stand alone appliances
- Seamless power transmission through drive bolt technique and reinforces gear
- Safety vent position
- Low abraision of the components besides high gasket pressure
- Easy door closing
- Hygiene comfort
- Complementary handle to 6334 and 6339 series
- Handle customization upon request
- Material:
  - Stainless steel
  - Zinc dye-cast
  - Plastic

Variations :

Handle, front mounted right hand:

Art.-Nr. 6337-0200110

Handle, front mounted left hand:

Art.-Nr. 6337-0200111

Strike:

Art.-Nr. 6337-020300

Gear unit:

Art.-Nr. 6337-020010

Drive bolt element:

Art.-Nr. 6337-020050

Optional:

Square bar pin,
variable length*

* Upon request

Hardware for heated applications

Handle for drive bolt latch | Series 6351

- Handle optional for drive bolt latch Series 0751
- Easy assembly
- Suitable for right- and left hinged doors
- Universal use
- Includes handle, housing and square-peg axis
- Handle customization upon request
- Allows for continuous handle-design
- Material:
  Handle - plastic, black;
  Housing - zinc die-cast, chromium-plated

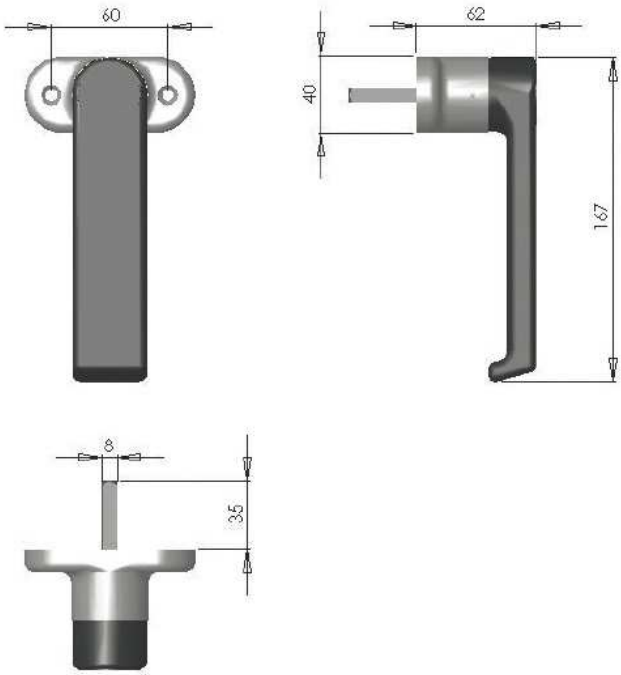

Variations:

Handle, frontside mounted, right hand:

Art.-Nr. 6351-020002

Handle, frontside mounted, left hand:

Art.-Nr. 6351-020001

Hardware for heated applications

Edge-mounted latch | Series 6200 | DUPLO

- Self-closing latch with proven technology
- Prepared for easy switch from 2-step opening to 1-step opening
- Various surface finishes
- Material: Zinc die-cast;
  Springs, screws - stainless steel

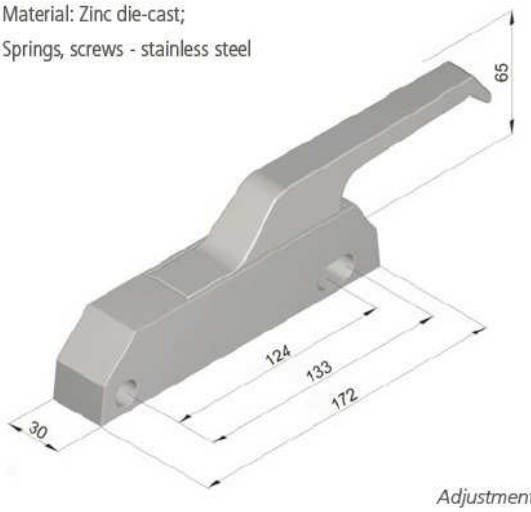

Handle variations:

Handle standard

Handle large

Handle socket

Adjustment options

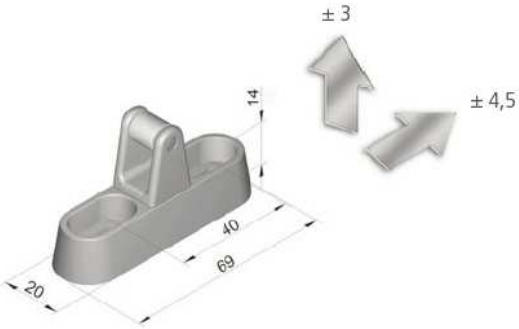

Variations:

Handle standard, chromium-plated:

Art.-Nr. 6200-020980

Handle large*,black:

Art.-Nr. 6200-020961

Handle socket, chromium-plated / black:

Art.-Nr. 6200-020920

Option:

Strike, galvanized:

Art.-Nr. 6200-020921

* Upon request / mimimum order quantities apply

Hardware for heated applications

Edge mounted latch | Series 6202 | MAGNETO

- Self-closing latch with variable closing force
- For ovens, proofers, trolleys and many more
- Magnetic latching system
- Closing force 150N, 300N and 450 N available
- Material:
  Handle and housing - cathodic dip painted (black);
  Washer - plastic

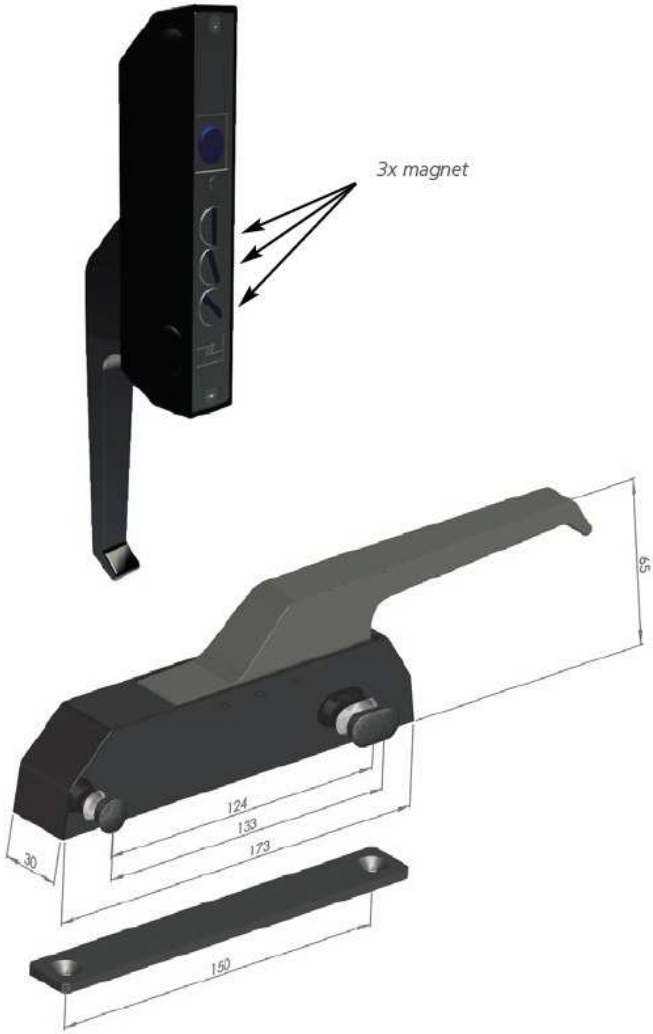

Variations:

Edge-mounted magnetic latch, cathodic dip painted (black):

450 N Art.-Nr. 6202-020100

Option:

Washer:

Art.-Nr. 6202-020090

Hardware for heated applications

Edge-mounted latch | Series 6188 | ERGO

- Self-closing latch with adjustable closing force
- Latches only with door closed
- Wide variety of surface finishes
- Material:
  Handle and housing - zinc die-cast

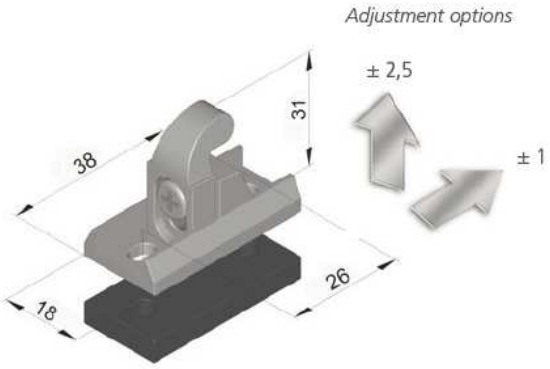

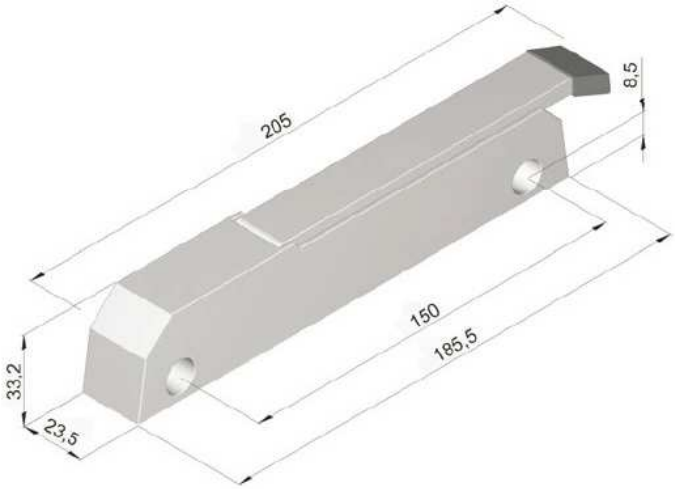

Variations:

Handle, chromium-plated:

Art.-Nr. 6188-020028

Option:

Strike, adjustable:

Art.-Nr. 6188-020207

Spacer, 5 mm:

Art.-Nr. 6188-020208

Hardware for heated applications

Electro-magnetic latch | Series 8440 | HOPPO

- Self-closing latch with integrated status report
- Versatile installation options
- Emergency opening
- RoHS compliant
- Finger-pinch safe against according to VDE
- Space-saving design
- Electrical opening up to 200 N counter pressure
- Static closing force ≤ 500 N
- Horizontal and vertical installation
- Adjustable strike
- Protective extra-low voltage
- Temperature resistant
- Material: Plastic, black, stainless steel

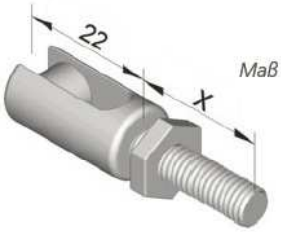

Maß X = 16 / 22

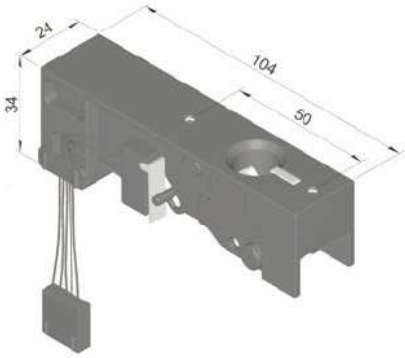

Variations:

24 V DC:

Art.-Nr. 8440-020001
Art.-Nr. 8440-020050 (with leg spring)

12 V DC:

Art.-Nr. 8440-020003
Art.-Nr. 8440-020052 (with leg spring)

Optional:

Strike, dimension x = 16 mm:

Art.-Nr. 8440-020010

Strike, dimension x = 22 mm:

Art.-Nr. 8440-020011

Connector with adapter, cable 1.3 m:

Art.-Nr. 8440-020030

Connector with adapter, cable 1.9 m:

Art.-Nr. 8440-020031

* Upon request / mimimum order quantities apply

Hardware for heated applications

Electro-magnetic latch | Series 8410

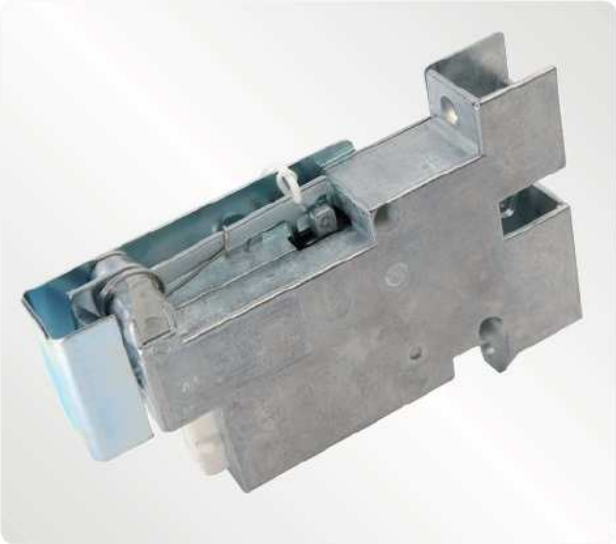

- Self-closing latch with integrated status-report
- Space-saving installation
- Emergency opening
- Trip-free release
- Electric opening up to 300 N counter pressure
- Static closing force ≤ 1,800 N
- RoHS compliant
- Horizontal and vertical installation
- Temperature resistant
- High voltage (110V upon request)
- Material: Zinc die-cast, stainless steel

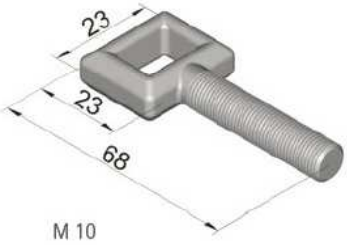

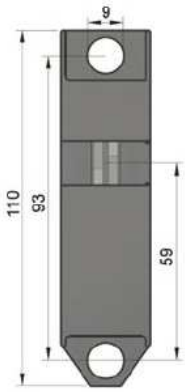

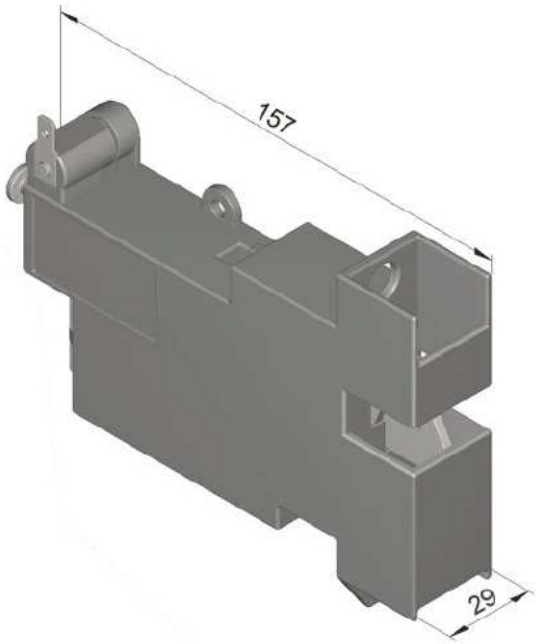

Variations:

230V A/C zinc die cast, stainless steel:

Art.-Nr. 8410-010185

Option:

Strike:

Art.-Nr. 8410-010189

Hardware for heated applications

Electro-motoric latch | Series 8800 | GIRO

- Self-closing latch with electrical locking assistance
- Closing force 300N
- Versatile installation options
- Static closing force ≤ 8,500 N
- Variantions with comfort closing
- Variations with 2-step opening for heated applications
- RoHS compliant
- Emergency opening
- Installation horizontally and vertically
- 4 methods of locking
- Impuls safe for use with centrifuges
- Control for comfort functions optionally available
- Material: Housing - plastic, black; Latching mechanism - steel

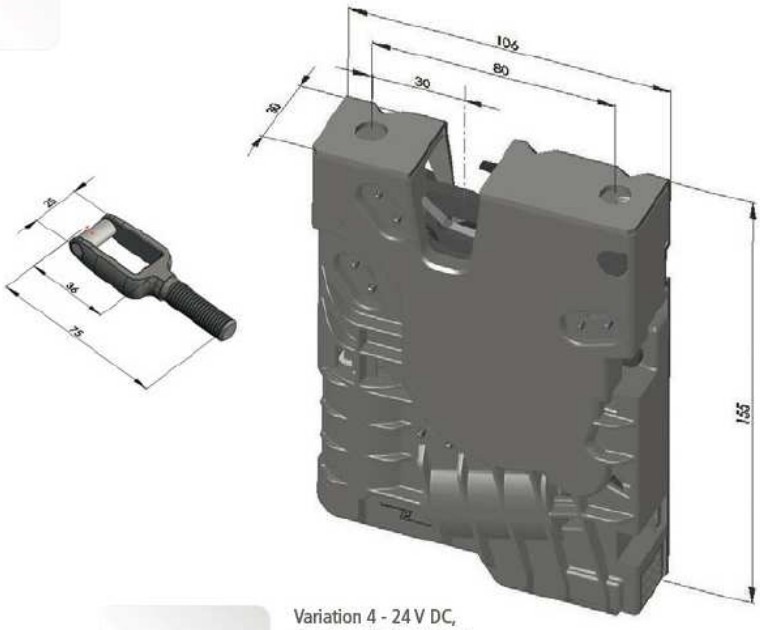

Variations:

Variation 1 - 24 V DC,
manual closing,
electro-motoric one-step opening:

Art.-Nr. 8800-020001

Variation 2 - 24 V DC,
manual closing,
electro-motoric two-step opening:

Art.-Nr. 8800-020002

Variation 3 - 24 V DC,
electro-motoric closing,
electro-motoric one-step opening:

Art.-Nr. 8800-020003

Variation 4 - 24 V DC,
electro-motoric closing,
electro-motoric two-step opening:

Art.-Nr. 8800-020004

Option:

Strike with steel roller for ovens:

Art.-Nr. 8800-020011

Hardware for heated applications

Edge-mounted hinge | Series 4500

- Edge-mounted door hinge in modern and classy design
- Quick and easy assembly
- Wide variety in surface coloring
- Protection against unauthorized dismantling
- To be used for left- and right-hinged doors
- Door weight capacity of max. 25 kg (2 hinges)
- Material:
  Lug/Leaf - metal / zinc die-cast;
  Caps - plastic, black

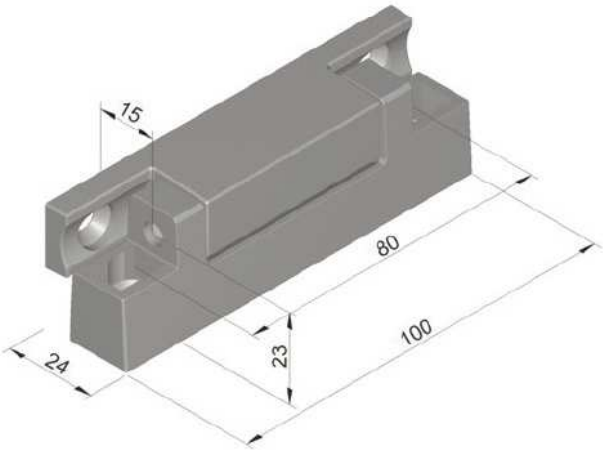

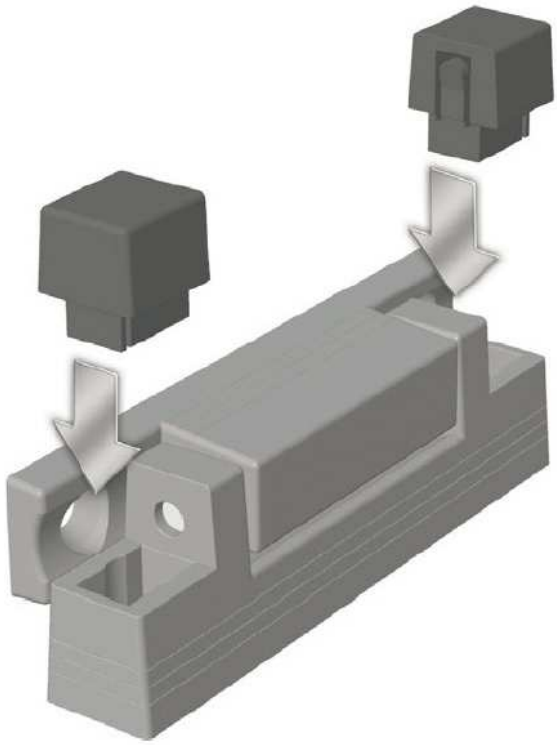

Variations:

Edge-mounted hinge*, chromium-plated:

Art.-Nr. 4500-020396

Optional:

Spacer, plastic, 6 mm:

Art.-Nr. 4500-020404

* Upon request / mimimum order quantities apply

NEW!

Hardware for heated applications

Strike blocking unit | access control | 6311

- Space-saving installation options
- Blocks against unauthorized opening during operation
- Inhibits circumvention of safety-related functions
- 1- or 2-step opening
- Ideal for temperature-critical installation
- Adaptable / upgradable to system 6303, 6333 and 6334
- Material: Stainless steel, plastic

Strike blocking unit 6V:

One-step opening: Art-Nr. 6311-020010
two-step opening: Art-Nr. 6311-020011

Electro-mechanic latches

Electro-magnetic latches

0437

8420

8440

8480

8410

Electro-motoric latches

8800

8810

Latch for side-gates (vending vehicles)

6193

NEW!
Electro-magnetic latch
Series 8480 | HOPPO WATERPROOF

NEW!

Electro-mechanic latches

Electro-magnetic latch | Serie 8480 | HOPPO WATERPROOF

- New HOPPO generation enhanced by standard IP 67
- Self-closing latch with status report and stainless steel housing
- For centrifuges, heated appliances and technical applications
- Versatile installation options
- Emergency opening
- RoHS compliant
- Finger-pinch safe against according to VDE
- Space-saving design
- Electrical opening up to 300 N counter pressure
- Horizontal and vertical installation
- Impuls safe for use with centrifuges
- Static closing force ≤ 5000 N
- Adjustable strike
- Protective extra-low voltage
- Temperature resistant
- Material: Stainless steel, plastic

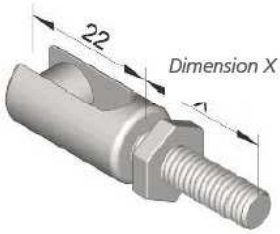

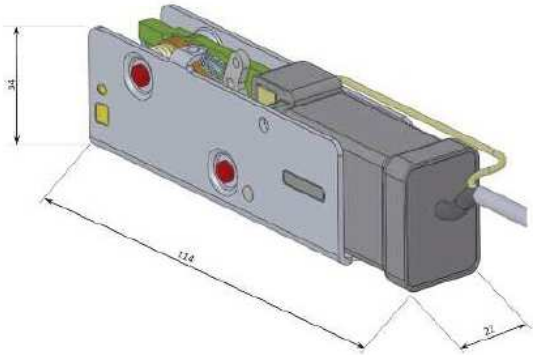

Variations:

12 V DC, stainless steel , waterproof IP 67:

Art.-Nr. 8480-020001

Option:

Strike, X-dimension = 16 mm:

Art.-Nr. 8440-020010

Strike, X-dimension = 22 mm:

Art.-Nr. 8440-020011

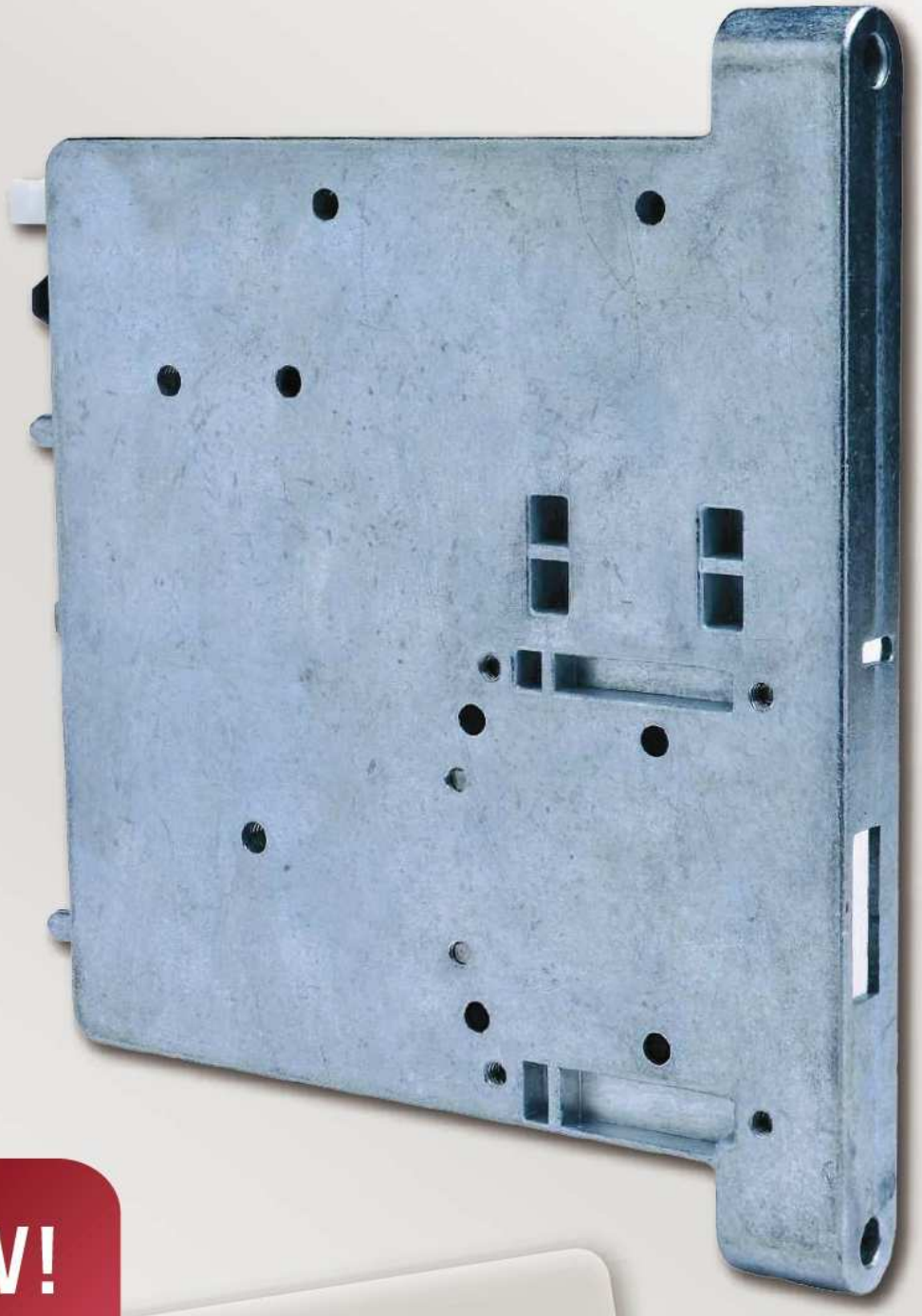

NEW!

Electro-mechanic latches

Series 8810 | ORIO

NEW!

Electro-mechanic latches

Electro-motoric latch | Series 8810 | ORIO

- Very flat, self-closing latch with electrical locking assistance
- For heated applications, medical and technical applications
- Closing force 300 N
- Versatile installation options
- Static closing force ≤ 6,500 N
- With comfort closing
- Shockresistant
- RoHS compliant
- Emergency opening
- Installation horizontally and vertically
- Impuls safe for use with centrifuges
- All materials are listed UL
- Material: Housing - zinc diecast; Latching mechanism - steel

Variations:

24V:

Art.-Nr. 8810-020001

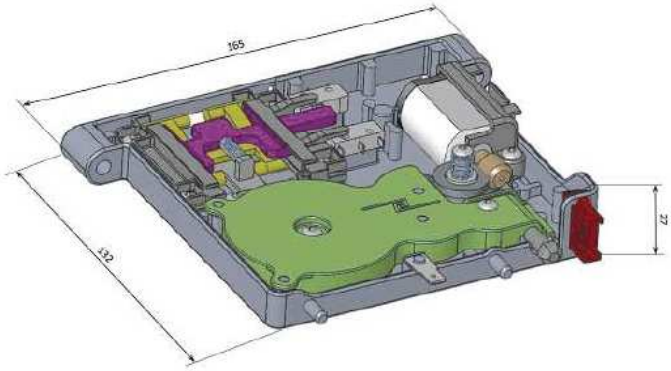

Option:

Strike:

Art.-Nr. 8810-020010

Electro-mechanic latches

Electro-magnetic latch | Series 0437

- Self-closing latch with integrated status-report
- For laundry machines and technical applications
- High voltage (110V upon request)
- Electric opening up to 200N counter pressure
- Numerous options of installation
- Emergency opening
- Trip-free release
- RoHS compliant
- Static closing force ≤ 500 N
- Material: Zinc die-cast, stainless steel

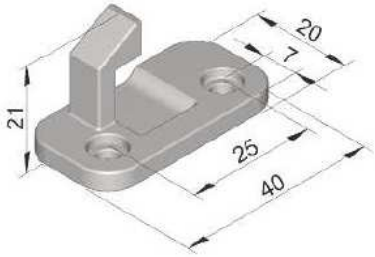

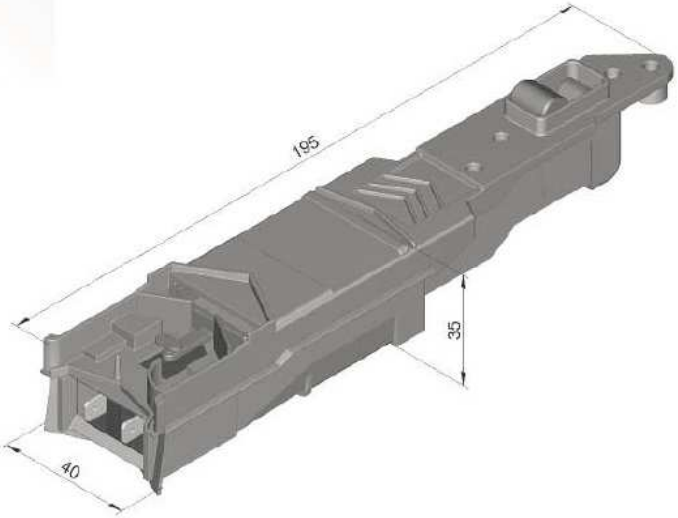

230V / AC:

Art.-Nr. 0437-020823

Option:

Strike:

Art.-Nr. 0437-010062

Electro-mechanic latches

Electro-magnetic latch | Series 8420

- Self-closing latch with integrated status-report
- Top-loader version for centrifuges, laundry machines and technical applications
- Space-saving design
- Emergency opening
- Trip-free release
- Electric opening up to 200 N counter pressure
- Static closing force ≤ 500 N
- RoHS compliant

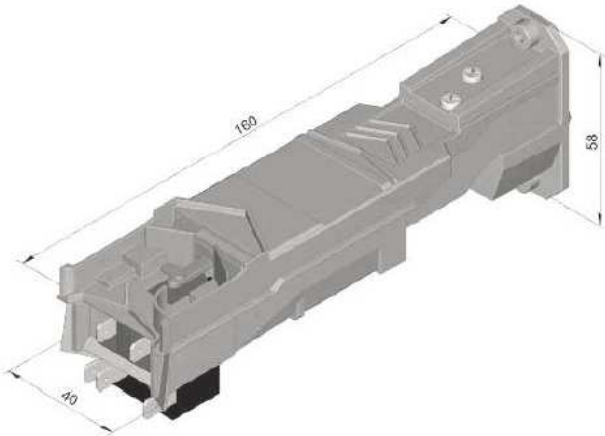

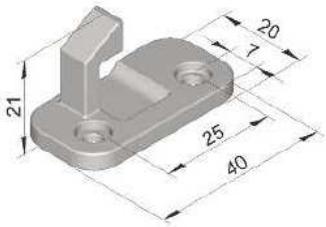

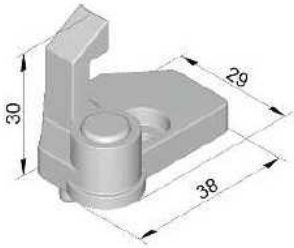

230V / AC, zinc die-cast, stainless steel:

Art.-Nr. 8420-020825

Option:

Strike:

Art.-Nr. 0437-010040

Strike:

Art.-Nr. 0437-010062

Electro-mechanic latches

Electro-magnetic latch | Series 8440 | HOPPO

- Self-closing latch with integrated status report
- Versatile installation options
- Emergency opening
- RoHS compliant
- Finger-pinch safe against according to VDE
- Space-saving design
- Electrical opening up to 200 N counter pressure
- Static closing force ≤ 500 N
- Horizontal and vertical installation
- Adjustable strike
- Protective extra-low voltage
- Temperature resistant
- Material: Plastic, black, stainless steel

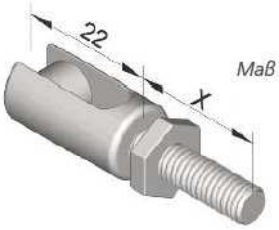

Maß X = 16 / 22

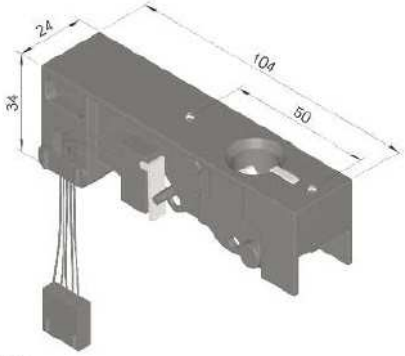

Variations:

24 V DC:

Art.-Nr. 8440-020001
Art.-Nr. 8440-020050 (with leg spring)

12 V DC:

Art.-Nr. 8440-020003
Art.-Nr. 8440-020052 (with leg spring)

Optional:

Strike, dimension x = 16 mm:

Art.-Nr. 8440-020010

Strike, dimension x = 22 mm:

Art.-Nr. 8440-020011

Connector with adapter, cable 1.3 m:

Art.-Nr. 8440-020030

Connector with adapter, cable 1.9 m:

Art.-Nr. 8440-020031

* Upon request / mimimum order quantities apply

NEW!

Electro-mechanic latches

Electro-magnetic latch | Serie 8480 | HOPPO WATERPROOF

- New HOPPO generation enhanced by standard IP 67
- Self-closing latch with status report and stainless steel housing
- For centrifuges, heated appliances and technical applications
- Versatile installation options
- Emergency opening
- RoHS compliant
- Finger-pinch safe against according to VDE
- Space-saving design
- Electrical opening up to 300 N counter pressure
- Horizontal and vertical installation
- Impuls safe for use with centrifuges
- Static closing force ≤ 5000 N
- Adjustable strike
- Protective extra-low voltage
- Temperature resistant
- Material: Stainless steel, plastic

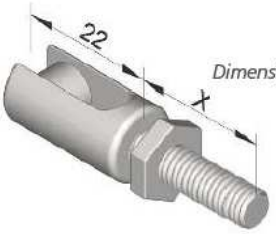

Dimension X = 16 / 22

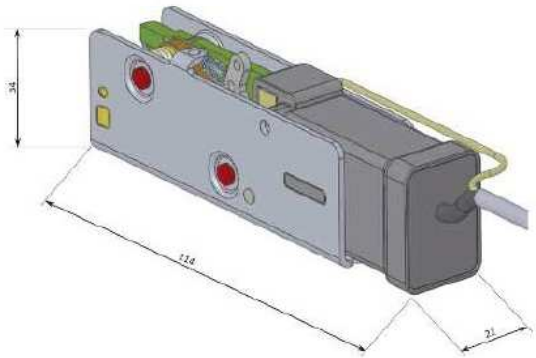

Variations:

12 V DC, stainless steel, waterproof IP 67:

Art.-Nr. 8480-020001

Option:

Strike, X-dimension = 16 mm:

Art.-Nr. 8440-020010

Strike, X-dimension = 22 mm:

Art.-Nr. 8440-020011

Electro-mechanic latches

Electro-magnetic latch | Series 8410

- Self-closing latch with integrated status-report
- For centrifuges, heated- and technical applications
- Numerous options of installation
- Emergency opening
- Trip-free release
- Electric opening up to 300 N counter pressure
- Static closing force ≤ 1,800 N
- RoHS compliant
- Horizontal and vertical installation
- Temperature resistant
- High voltage (110V upon request)
- Material: Zinc die-cast, stainless steel

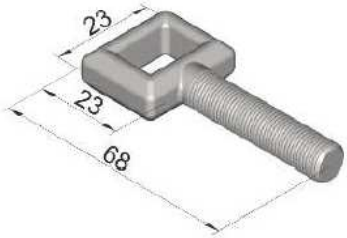

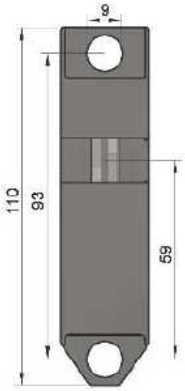

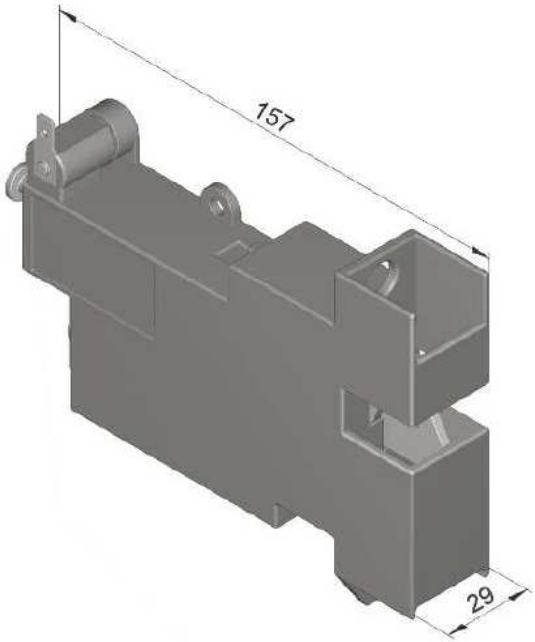

Variations:

230V / AC:

Art.-Nr. 8410-010200

110V / AC:

Art.-Nr. 8410-010201

Option:

Strike:

Art.-Nr. 8410-010189

NEW!

Electro-mechanic latches

Electro-motoric latch | Series 8810 | ORIO

- Very flat, self-closing latch with electrical locking assistance
- For heated applications, medical and technical applications
- Closing force 300 N
- Versatile installation options
- Static closing force ≤ 6,500 N
- With comfort closing
- Shockresistant
- RoHS compliant
- Emergency opening
- Installation horizontally and vertically
- Impuls safe for use with centrifuges
- All materials are listed UL
- Material: Housing - zinc diecast; Latching mechanism - steel

Variations:

24:

Art.-Nr. 8810-020001

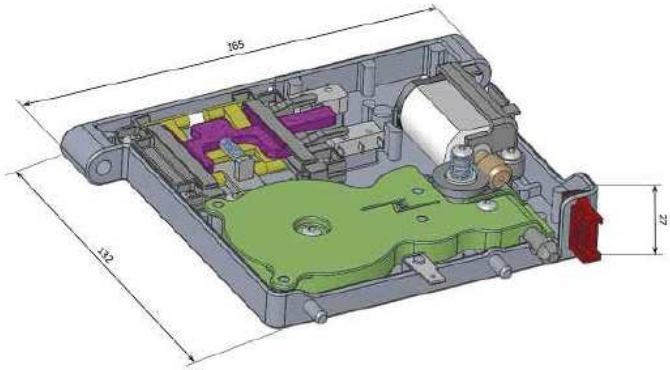

Option:

Strike:

Art.-Nr. 8810-020010

Electro-mechanic latches

Electro-motoric latch | Series 8800 | GIRO

- Self-closing latch with electrical locking assistance
- For heated applications, centrifuges and technical applications
- Closing force 300 N
- Versatile installation options
- Static closing force ≤ 8,500 N
- Variantions with comfort closing
- Variations with 2-step opening for heated applications
- RoHS compliant
- Emergency opening
- Installation horizontally and vertically
- 5 methods of locking
- Impuls safe for use with centrifuges
- Control for comfort functions optionally available
- Material: Housing - plastic, black; Latching mechanism - steel

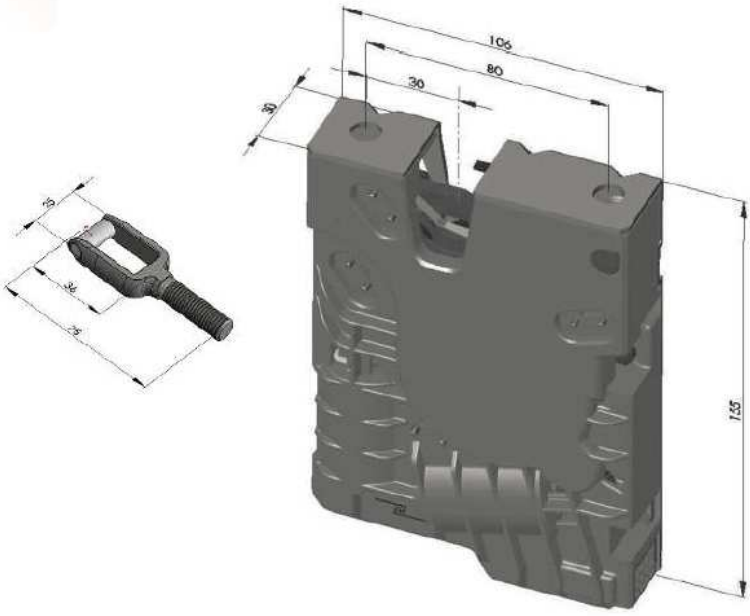

Variations:

Variation 1 - 24 V DC,
manual closing,
electro-motoric one-step opening:

Art.-Nr. 8800-020001

Variation 2 - 24 V DC,
manual closing,
electro-motoric two-step opening:

Art.-Nr. 8800-020002

Variation 3 - 24 V DC,
electro-motoric closing,
electro-motoric one-step opening:

Art.-Nr. 8800-020003

Variation 4 - 24 V DC,
electro-motoric closing,
electro-motoric two-step opening:

Art.-Nr. 8800-020004

Variation 5 - 24 V DC,
electro-motoric closing,
electro-motoric one-step opening
for centrifuges:

Art.-Nr. 8800-020005

Option:

Strike:

Art.-Nr. 8410-010189

Strike with steel roller for
heated- and technical applications:

Art.-Nr. 8800-020011

Electro-mechanic latches

Latch for side-gates (vending vehicles) | Series 6193

- For use with right- or left-hinged doors
- Self-closing latch for integration in safety circuits
- Emergency opening
- RoHS compliant
- Vending vehicles and technical applications
- Status report (open/closed) available via micro-switch
- Self-centering strike

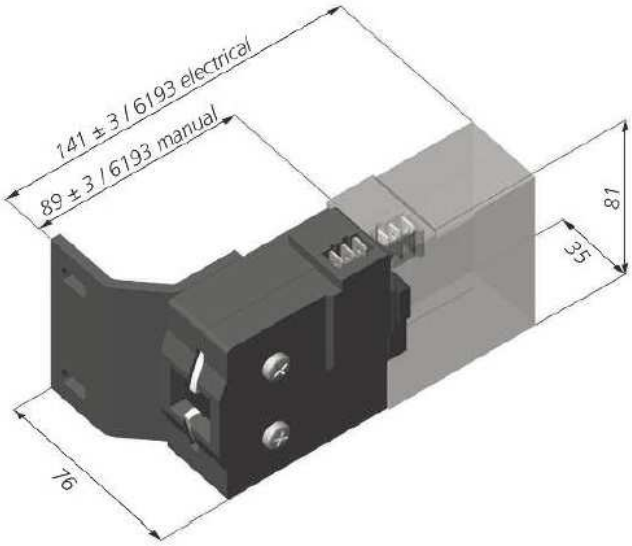

Variations:

Latch, actuated manually:

Art.-Nr. 6193-020001

Latch 12 V DC, actuated electrically:

Art.-Nr. 6193-020003

Option:

Strike:

Upon request

Kontakt / Contact

Sídlo společnosti: (Office)

Iwo Group s.r.o.

Ing. Ivan Vobořil
Sales Manager – Eastern Europe
Vlasty Buriana 489/1
190 15 Praha 9
Česká republika

ICO (ID): 27558843
DIC (VAT): CZ27558843

Tel. (Phone): +420 602 558 254
E-mail: ivan.voboril@iwogroup.eu
Skype: ivan.voboril
www.iwogroup.eu

Kontakt / Contact

Sklad: (Warehouse)

Areál Impera Park – budova"M"

Oderská 333/5
196 03 Praha 9
Česká republika

Tel. (Phone) : +420 602 558 254
E-mail: ivan.voboril@iwogroup.eu
sales@ iwogroup.eu
www.iwogroup.eu