www.iwogroup.eu sales@iwogroup.eu tel.: +420 602 558 254

DRAINS

DRAINS

Encore® Premium Drain Master™ World's Greatest Drain

NSF Listed, CSA and ANSI Certified

DRAIN MASTER™

DSS-8000

DSS-8000-Q

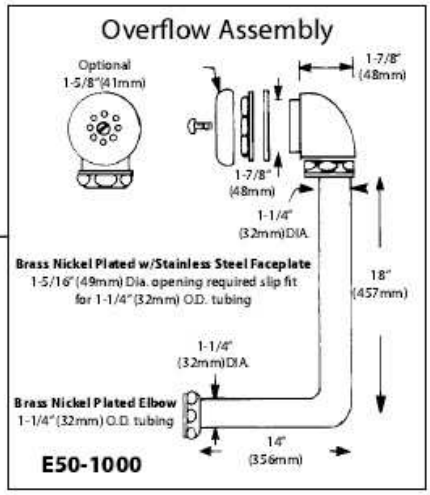

1. Solid stainless steel Type 316 construction throughout
2. 3 times the flow rate of conventional lever drains
2. Rotary valve provides fast, unobstructed water evacuation.
2. Full opening ball valve allows access for snaking or plunging from sink top eliminating costly service calls.
3. Twist lock recessed removable beehive crumb-cup prevents clogging and ensures continuous water flow.
4. Self-adjusting heat and chemical resistant PTFE seals eliminate costly replacement of o-rings and conventional gaskets.
5. Unique body style provides fast installation from sink top.
6. Solid stainless steel remote handle assembly for smooth, easy operation
7. Universal body provides both 2" and 1-1/2" (51mm and 38mm) waste outlet connections.
8. Fits standard 3-1/2" (89mm) sink opening
9. Can instantly convert to accept an overflow assembly eliminating double inventories
10. Optional flat strainer DSS-Y007

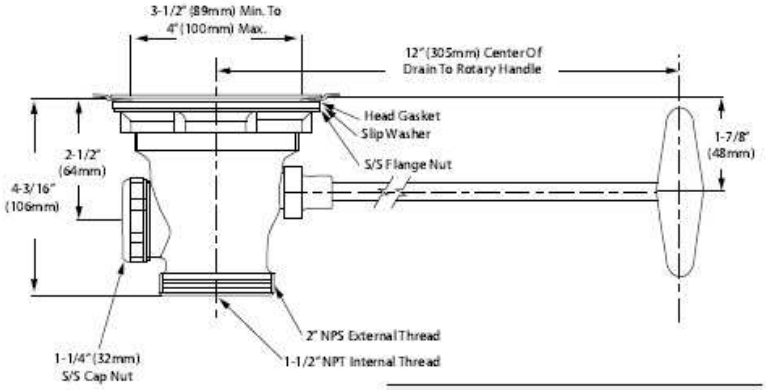

Repair Parts For DSS And DBN Drains		
1	DSS-X031	Screw
2	DSS-X004	Retainer
3	DSS-X027	Back-Up Ring
4	DSS-X002	S/S Ball
5	DSS-X008	Overflow Cap
6	DSS-X022	Slip Ring
7	DSS-X018	Flange Nut
8	DSS-Y003	Strainer Assembly
9	DSS-Y002	Handle Assembly
10	DSS-0010	Included In Repair Kit
11	DSS-Y007	Flat Strainer (Optional)

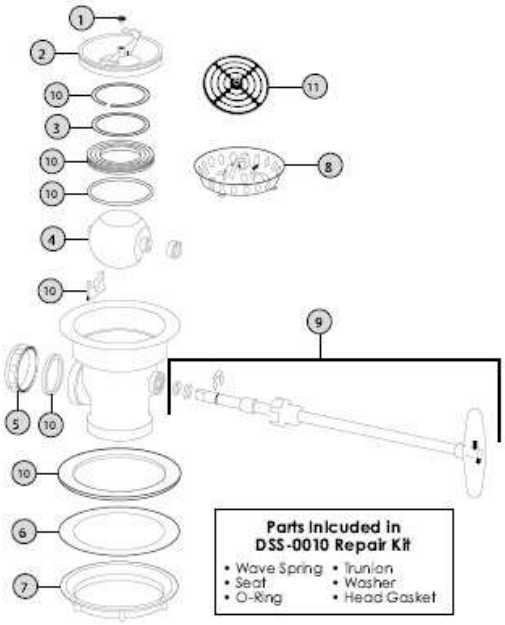

Parts Inlcuded in DSS-0010 Repair Kit

- Wave Spring
- Seat
- O-Ring
- Trunion
- Washer
- Head Gasket

DRAINS

Encore® Heavy-Duty Rotary Drains

Heavy-Duty Nickel Plated Solid Brass Rotary Drain		
Model	**Description**	
DBN-8000	(Shown)	DBN-8000-Q
DSS-0010	Repair Kit for DSS and DBN	
DSS-Y003	Replacement Crumb Cup	DSS-Y003-Q
DSS-Y007	Optional Flat Strainer	DSS-Y007-Q

- NSF Listed
- CSA and ANSI Certified
- Heavy-duty nickel plated solid brass
- Rotary valve provides fast, unobstructed water evacuation.
- Twist lock recessed removable beehive crumb-cup prevents clogging and insures continuous water flow.
- Self-adjusting heat and chemical resistant PTFE seals eliminate costly replacement of o-rings and conventional gaskets.
- 3 times the flow rate of conventional lever drains
- Fits standard 3-1/2" (89mm) sink opening
- Full opening ball valve allows access for snaking or plunging from sink top and eliminates costly service calls.
- Unique body style provides fast installation from sink top.
- Solid stainless steel remote handle assembly for smooth, easy operation
- Specification grade
- Universal body provides both 2" and 1-1/2" (51mm and 38mm) waste outlet connection and can instantly convert to accept an overflow assembly eliminating double inventories
- Overflow accessories available

Model No. **DBN-8000**

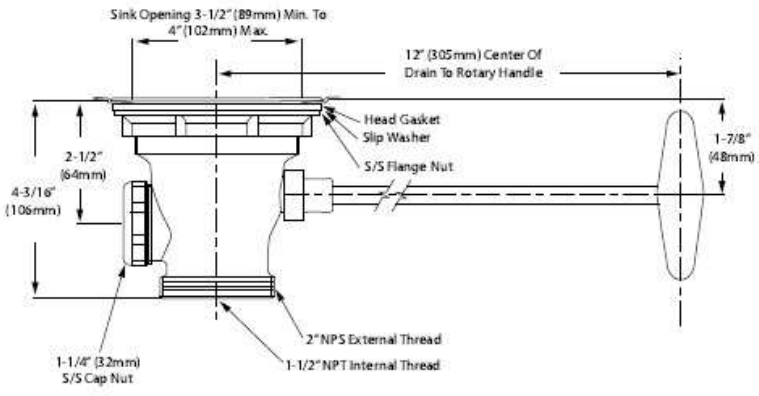

Optional Overflow Assembly
E50-1000

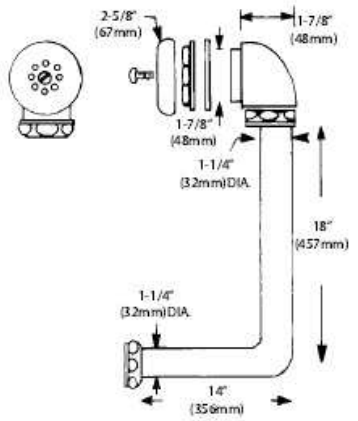

DRAINS

TOP-LINE® ABS Rotary Drains

SINKMATE

ABS Plastic Rotary Drain	
Model	**Description**
DPL-8000	Furnished with 12" (305mm) Handle
DPL-8000-S	Furnished with 6" (152mm) Handle
DPL-Y006	Optional Reducer

- NSF Listed • CSA and ANSI Certified
- Economical solid ABS plastic • Exposed areas stainless steel clad
- Chrome plated, twist lock removable beehive crumb cup prevents clogging and ensures continuous water flow
- Chemical resistant Celcon® seals eliminate costly replacement of o-rings and conventional gaskets.
- Fits standard 3-1/2" (89mm) sink opening
- Full opening ball valve allows access for snaking or plunging from sink top eliminates costly service calls.
- Solid stainless steel remote handle assembly for smooth, easy operation
- Unaffected by today's harsh cleaning chemicals
- Universal body provides both 2" and 1-1/2" (51 and 38mm) waste outlet connection and can instantly convert to accept an overflow assembly, eliminating double inventories.
- Unique body style provides fast installation from sink top.
- Remote operation safely permits sink to drain while protecting operators hands from harmful broken glass, sharp knives and utensils, replaces conventional basket drains.

DPL-8000

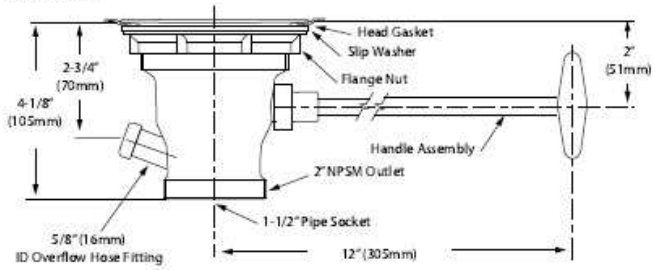

DPL-8000-S

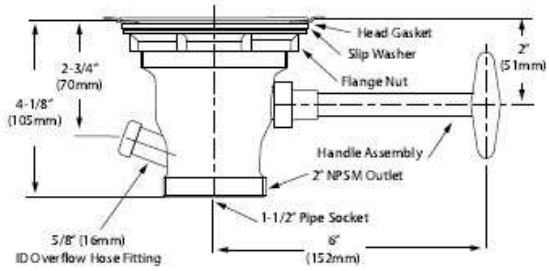

E52-1000
Optional Overflow Assembly

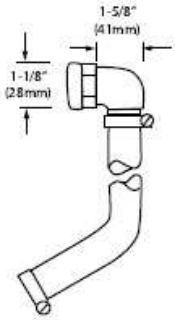

Overflow assembly consists of:

- Nickel plated brass branch tailpiece sub-assembly
- (2) stainless steel clamps
- 32" (813mm) long rubber hose
- Chrome plated ABS overflow head (shown on pg 132)

DPL-Y006
Optional Reducer

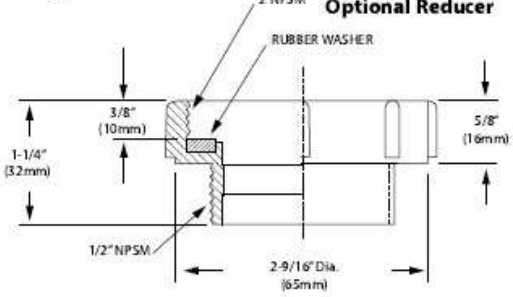

DRAINS

Encore® Premium Stainless Steel Rotary Drains

Solid Stainless Steel Rotary Drain, Type 316 Prison Vandal Resistant		
Model	**Description**	
DSS-8000-P	(Shown)	DSS-8000-PQ
DSS-8015-P	Drain with overflow assembly	
DSS-Y003	Replacement Crumb Cup	DSS-Y003-Q
DSS-Y007	Optional Flat Strainer	DSS-Y007-Q
DSS-Y006	Optional Retainer Kit	

TOP-LINE® Universal Twist and Lever Drains

Universal body provides both 1-1/2" (38mm) and 2" (51mm) waste outlet connections and can instantly convert to accept an overflow assembly eliminating double inventories

- Snap-in stainless steel strainer
- Heavy duty body
- Self-centering flange
- Stainless steel handle
- Optional 1-1/4" (32mm) complete overflow assembly - Use Model No. E50-1000

Universal Lever Drain	
Model	**Description**
D15-7510	(Shown)
D15-7515	With Overflow Assembly
D15-7510-R	2" - 1-1/2" Male Reducer

Universal Twist Drain	
Model	**Description**
D55-7510	(Shown)
D55-7515	With Overflow Assembly
D55-7510-R	2" - 1-1/2" Male Reducer

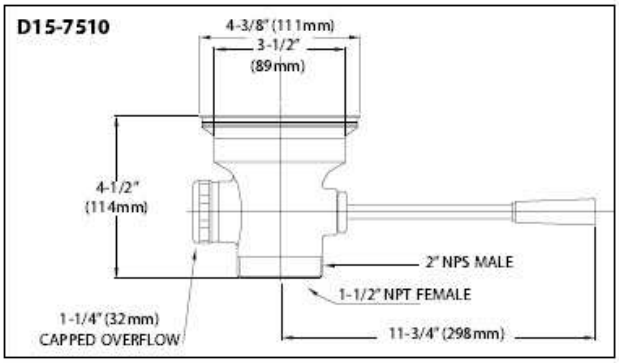

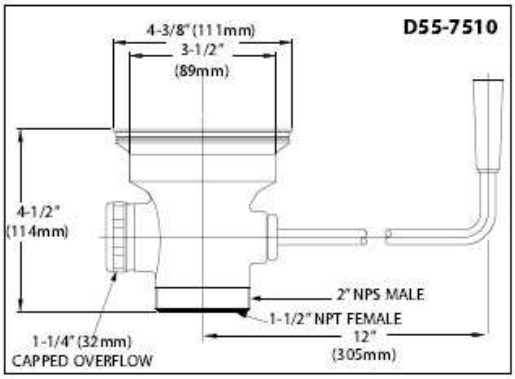

DRAINS

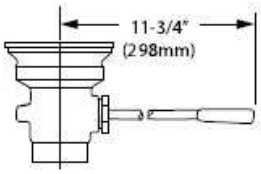

Encore® Lever Handle Waste Outlets

• Trouble free fast drainage • Positive sealing action • Cast brass body
• Snap-in stainless steel strainers • Self-centering face flanges • Stainless steel handle

Lever Handle Waste Outlets				
Model	**Sink Opening Dia**	**NPS**	**Face Flange Dia**	**Strainer Type**
D10-4161	3" (76mm)	1-1/2"	4" (102mm)	Flat
D10-4160	3" (76mm)	2"	4" (102mm)	
D10-7300	3-1/2" (89mm)	1-1/2"	4-1/2" (114mm)	
D10-7400	3-1/2" (89mm)	2"	4-1/2" (114mm)	
D13-7300	3-1/2" (89mm)	1-1/2"	4-1/2" (114mm)	Crumb Cup
D13-7400	3-1/2" (89mm)	2"	4-1/2" (114mm)	
Lever Handle Waste Outlet with Overflow Outlet				
D10-4151	3" (76mm)	1-1/2"	4" (102mm)	Flat
D10-4150	3" (76mm)	2"	4" (102mm)	
D10-7310	3-1/2" (89mm)	1-1/2"	4-1/2" (114mm)	
D10-7410	3-1/2" (89mm)	2"	4-1/2" (114mm)	
D13-7310	3-1/2" (89mm)	1-1/2"	4-1/2" (114mm)	Crumb Cup
D13-7410	3-1/2" (89mm)	2"	4-1/2" (114mm)	
Lever Handle Waste Outlet with Overflow Assembly				
D10-4591	3" (76mm)	1-1/2"	4" (102mm)	Flat
D10-4590	3" (76mm)	2"	4" (102mm)	
D10-7315	3-1/2" (89mm)	1-1/2"	4 -1/2" (114mm)	
D10-7415	3-1/2" (89mm)	2"	4-1/2" (114mm)	
D13-7315	3-1/2" (89mm)	1-1/2"	4-1/2" (114mm)	Crumb Cup
D13-7415	3-1/2" (89mm)	2"	4-1/2" (114mm)	

NOTE: All sink contact components are stainless steel. All other components are nickel plated to match stainless steel.

2" NPS female to 1-1/2" NPT male nickel plated reducer available. Specify number E30-7744.

Lever Twist Drain Repair Kit	
Model	**Description**
D10-0010	Includes one of each listed below
Stopper "O" Ring, Neoprene	
Head Gasket for 3" Opening	
Head Gasket for 3-1/2" Opening	
E-Ring	
Rubber O-Ring	
Packing Nut Bushing	
Body Bushing (Lever Model)	
Slip Joint Washer	
Washer	
Black Thermoplastic Knob	
Paper Washer 3" Face Flange	
Paper Washer 3-1/2" Face Flange	

Universal S/S Drain Handle Support For Lever Handle Outlets	
Model	**Gauge**
D50-1000	14

• 300 Series S/S • Satin finish
• Sturdy 14 gauge construction

Optional Nickel Plated Brass and Plastic Reducers	
Model	**Size**
E30-7744	Brass 2" NPS Female to 1-1/2" NPT Male
DPL-Y006	Plastic 2" NPS Female to 1-1/2" NPT Male

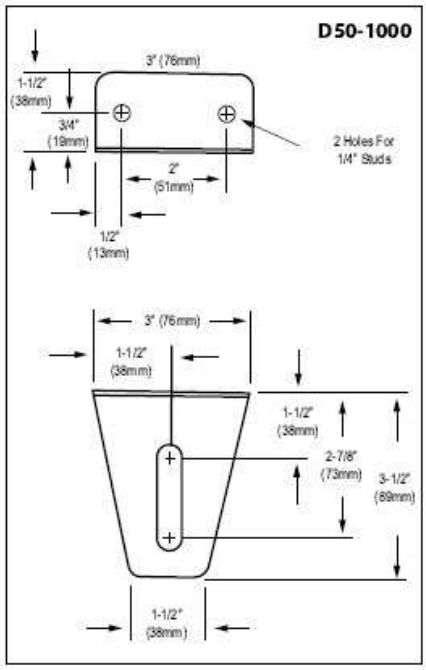

DRAINS

Encore® Twist Handle Waste Outlets

• Trouble free fast drainage • Positive sealing action • Cast brass body
• Snap-in stainless steel strainers • Self-centering face flanges • Stainless steel handle

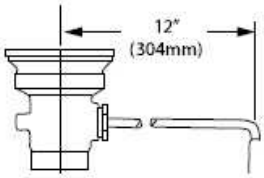

Twist Handle Waste Outlets				
Model	**Sink Opening Dia**	**NPS**	**Face Flange Dia**	**Strainer Type**
D50-4161	3" (76mm)	1-1/2"	4" (102mm)	
D50-4160	3" (76mm)	2"	4" (102mm)	
D50-7100	3-1/2" (89mm)	1-1/2"	4-1/2" (114mm)	
D50-7200	3-1/2" (89mm)	2"	4-/2" (114mm)	
D53-7100	3-1/2" (89mm)	1-1/2"	4-1/2" (114mm)	
D53-7200	3-1/2" (89mm)	2"	4-1/2" (114mm)	
Twist Handle Waste Outlet with Overflow Outlet				
D50-4151	3" (76mm)	1-1/2"	4" (102mm)	
D50-4150	3" (76mm)	2"	4" (102mm)	
D50-7110	3-1/2" (89mm)	1-1/2"	4-1/2" (114mm)	
D50-7210	3-1/2" (89mm)	2"	4-1/2" (114mm)	
D53-7110	3-1/2" (89mm)	1-1/2"	4-1/2" (114mm)	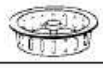
D53-7210	3-1/2" (89mm)	2"	4-1/2" (114mm)	
Twist Handle Waste Outlet with Overflow Assembly				
D50-4591	3" (76mm)	1-1/2"	4" (102mm)	
D50-4590	3" (76mm)	2"	4" (102mm)	
D50-7115	3-1/2" (89mm)	1-1/2"	4-1/2" (114mm)	
D50-7215	3-1/2" (89mm)	2"	4-1/2" (114mm)	
D53-7115	3-1/2" (89mm)	1-1/2"	4-1/2" (114mm)	
D53-7215	3-1/2" (89mm)	2"	4-1/2" (114mm)	

NOTE: All sink contact components are stainless steel. All other components are nickel plated to match stainless steel.

2" NPS female to 1-1/2" NPT male nickel plated reducer available. Specify number E30-7744.

Vandal Resistant Locking Flat Strainer For 3" (76mm) and 3-1/2" (89mm) Drain	
Model	**Description**
D10-X013-VP	For 3" (76mm) drain
D10-X014-VP	For 3-1/2" (89mm) drain

Universal S/S Drain Handle Support For Twist and Rotary Drain Outlets	
Model	**Gauge**
D50-2001	14

• 300 Series S/S • Satin finish
• Sturdy 14 gauge construction

Lever/Twist Drain Tool	
Model	D10-T001

For installation or repair of all lever and twist drains

Optional Nickel Plated Brass and Plastic Reducers	
Model	**Size**
E30-7744	Brass 2" NPS Female to 1-1/2" NPT Male
DPL-Y006	Plastic 2" NPS Female to 1-1/2" NPT Male

D50-2001

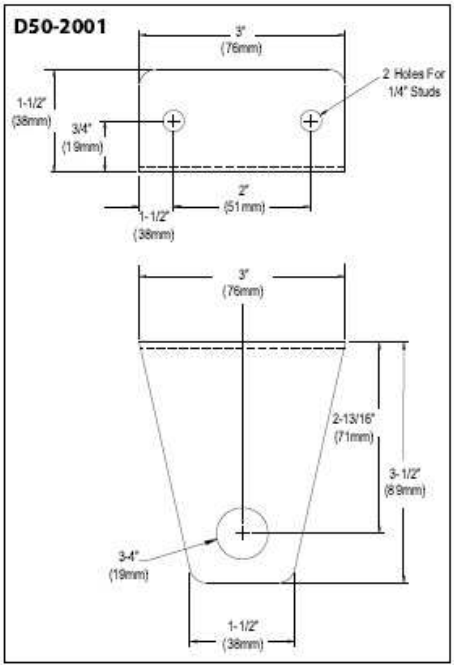

DRAINS

Encore® Box Pattern Drains
Lever and Twist Handle Models

• Heavy duty stainless steel basket assembly
• Bronze, nickel plated, waste outlet • Multiple strainer • Removable basket

Lever Handle Box Pattern Drain		
Model	**Sink Opening Dia**	**NPS**
D23-4161	6-1/2" (165mm)	1-1/2" (38mm)
D23-4160	6-1/2" (165mm)	2" (51mm)
Lever Handle Box Pattern Drain w/Overflow Outlet		
D23-4151	6-1/2" (165mm)	1-1/2" (38mm)
D23-4150	6-1/2" (165mm)	2" (51mm)
Lever Handle Box Pattern Drain with Overflow Assembly		
D23-4591	6-1/2" (165mm)	1-1/2" (38mm)
D23-4590	6-1/2" (165mm)	2" (51mm)

Twist Handle Box Pattern Drain		
Model	**Sink Opening Dia**	**NPS**
D63-4161	6-1/2" (165mm)	1-1/2" (38mm)
D63-4160	6-1/2" (165mm)	2" (51mm)
Twist Handle Box Pattern Drain w/Overflow Outlet		
D63-4151	6-1/2" (165mm)	1-1/2" (38mm)
D63-4150	6-1/2" (165mm)	2" (51mm)
Twist Handle Box Pattern Drain with Overflow Assembly		
D63-4591	6-1/2" (165mm)	1-1/2" (38mm)
D63-4590	6-1/2" (165mm)	2" (51mm)

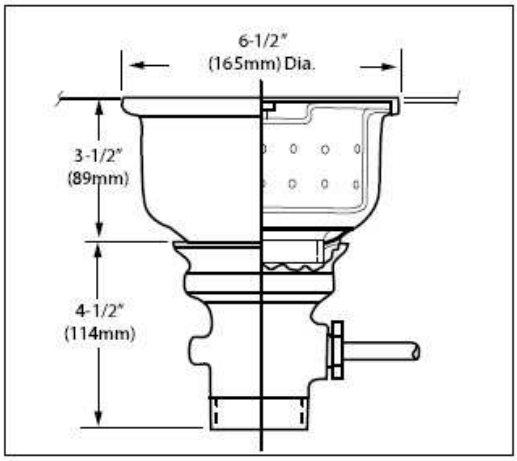

Parts List for Lever and Twist Handle Outlets

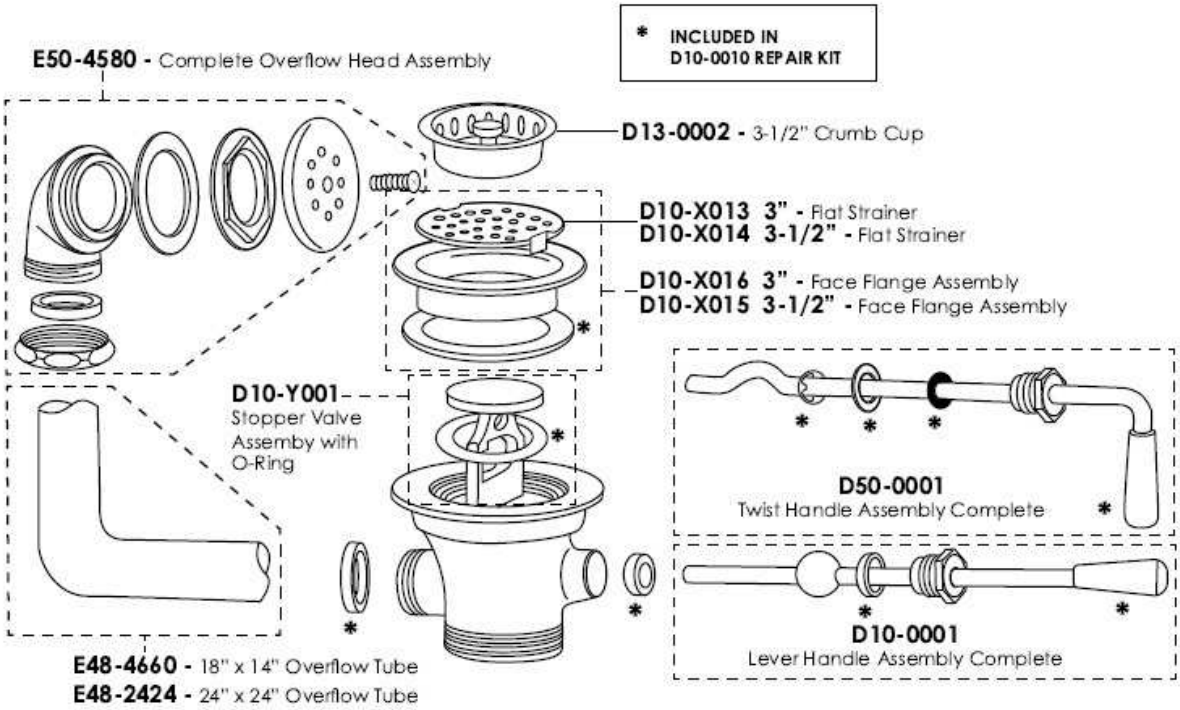

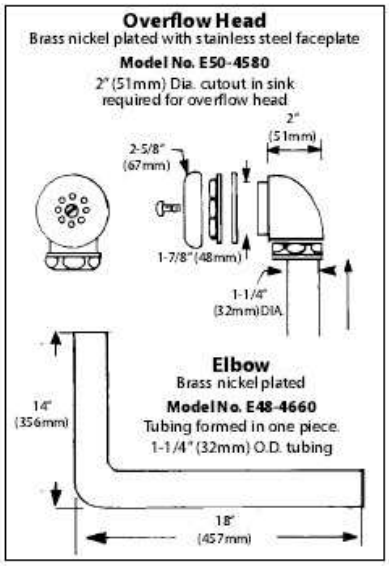

Lever Twist Drain Repair Kit	
Model	**Description**
D10-0010	Includes one of each listed below
Stopper "O" Ring, Neoprene	
Head Gasket for 3" Opening	
Head Gasket for 3-1/2" Opening	
E-Ring	
Rubber O-Ring	
Packing Nut Bushing	
Body Bushing (Lever Model)	
Slip Joint Washer	
Washer	
Black Thermoplastic Knob	
Paper Washer 3" Face Flange	
Paper Washer 3-1/2" Face Flange	

Optional Nickel Plated Brass and Plastic Reducers	
Model	**Size**
E30-7744	Brass 2" NPS Female to 1-1/2" NPT Male
DPL-Y006	Plastic 2" NPS Female to 1-1/2" NPT Male

DRAINS

Encore® Special Purpose Drains

Floor Type Open Drain		
Model	**Floor Opening Dia**	**NPS**
D34-4161	6-1/2" (165mm)	1-1/2"
D34-4060	6-1/2" (165mm)	2"
D10-X001	1-1/2" Drain Body Only	
D10-X003	2" Drain Body Only	
D34-X001	Cleanout Plug	

- Cast bronze, nickel plated, waste outlet
- Heavy duty stainless steel basket assembly
- Removable basket • Multiple strainer
- Convenient cleanout plug

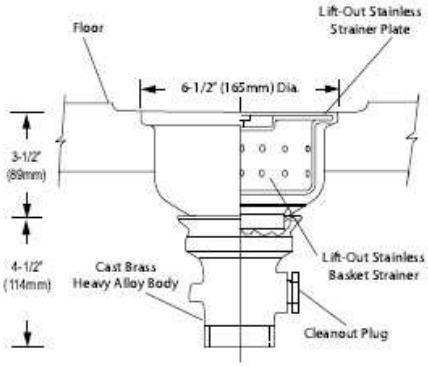

Free Flow Drain			
Model	**Sink Opening Dia**	**NPS**	**Face Flange Dia.**
D36-2080	3-1/8" (79mm)	2"	4-3/8" (111mm)

Applications: Mop sinks, autopsy tables, laboratory equipment, etc.

- Trouble free fast drainage
- Cast bronze body, nickel plated
- Snap-on stainless steel strainer
- Self centering face flange

Stainless Steel Basket Assembly for Box Pattern Drains		
Model	**Description**	**Ref.**
D34-Y011	Without Hub Connection	A
D34-Y011-MM	With Welded Connection	B
D34-X017	Stainless Steel Cover	
D34-X016	Stainless Steel Strainer	
D34-X015	Stainless Steel Bowl	

Applications: Scullery sinks, floor troughs, kettle troughs, wash down troughs

- Heavy duty stainless steel basket assembly
- Multiple strainer • Removable basket
- Easy cleanout • Normal servicing prevents clogging and eliminates costly plumbing repairs

Ref. A

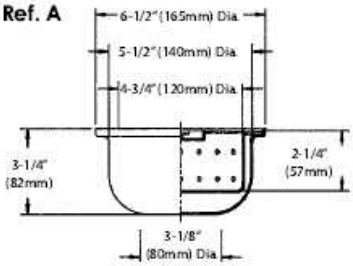

Ref. B

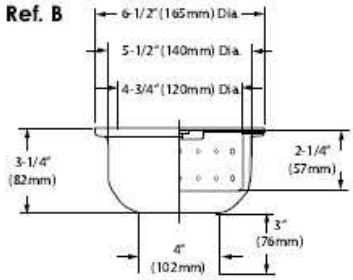

Lavatory Grid Drain	
Model	D83-4151-T

Equivalent to Chicago #327-XCP

Lavatory Offset Grid Drain	
Model	D83-4152-9T

Encore® Basket Drains and Components

Stainless Steel Duo Mini Basket Drains with Combination Removable Crumb Cup Stopper			
Model	**Sink Opening**	**NPS**	**Face Flange Dia**
E18-1824	1-7/8" (48mm)	1-1/2"	2-7/8" (73mm)
E18-1822*	1-7/8" (48mm)	1-1/2"	2-7/8" (73mm)
E18-1822-FL	1-7/8" (48mm)	1-1/2"	2-3/8" (60mm)

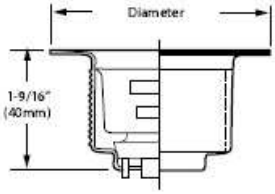

* Furnished without crumb cup stopper/locknut and washer supplied (Brass locknut available on application).

- Locknut and washer supplied
- Brass locknut available upon application
- 7-1/2", 10" and 12" (190mm, 254mm and 305mm) high overflows available

Replacement Crumb Cup	
Model	E18-1840

Flat Strainer	
Model	E18-1850

Stainless Steel Duo Basket Drains with Combination Removable Crumb Cup Stopper			
Model	**Sink Opening**	**NPS**	**Face Flange Dia**
E38-1010*	3.5 (89mm)	1-1/2"	4-1/2" (114mm)
E38-1012**	3.5 (89mm)	1-1/2"	4-1/2" (114mm)
E38-1013***	3.5 (89mm)	1-1/2"	4-1/2" (114mm)

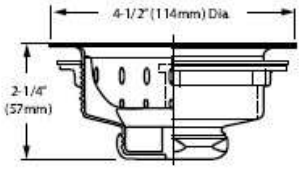

* Type 430 stainless steel, contains 16-18% chromium
** Type 18-8 stainless steel *** Type 316 stainless steel

- Coupling nut, gasket and sealing washer supplied
- Brass coupling nut available on application

Stainless Steel Flat Strainer Drain for 3-12" to 4" (89mm - 102mm) Openings		
Model	**Sink Opening**	**NPS**
E32-4900	3-1/2" - 4" (89mm - 102mm)	1-1/2"

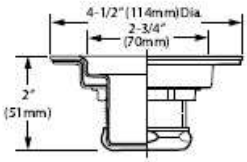

- Locknut, washer and coupling nut supplied

Stainless Steel Replacement Crumb Cup		
Model	**Sink Opening**	**NPS**
E38-4891	3-1/2" - 4" (89mm - 102mm)	1-1/2"

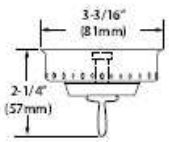

DRAINS

Encore® Sink Drains and Stoppers

Sink Drains, Brass Nickel Plated and ABS Thermoplastic

Model No.	Size	Sink Opening DIA	Face Flange DIA	Length	Material
E16-4171	1/2" NPS*	15/16" (24mm)	1-1/4" (32mm)	2" (51mm)	Brass
E16-4172	1/2" NPS*	15/16" (24mm)	1-1/4" (32mm)	2" (51mm)	Brass N.P.
E16-4173	1/2" NPS*	15/16" (24mm)	1-1/4" (32mm)	3-1/2" (89mm)	Brass
E16-4174	1/2" NPS*	15/16" (24mm)	1-1/4" (32mm)	3-1/2" (89mm)	Brass N.P.
E16-4210	3/4" NPS	1-1/8" NPS	1-1/2" (38mm)	1-1/4" (32mm)	Brass
E16-3010+	1" NPS	1-3/8" (35mm)	2" (51mm)	1-1/2" (38mm)	Gray ABS
E16-4010	1" NPS	1-3/8" (35mm)	2" (51mm)	1-1/2" (38mm)	Brass
E16-4011	1" NPS	1-3/8" (35mm)	2" (51mm)	1-1/2" (38mm)	Brass N.P.
E16-3020+	1" NPS	1-3/8" (35mm)	2" (51mm)	2-7/8" (73mm)	Gray ABS
E16-4020	1" NPS	1-3/8" (35mm)	2" (51mm)	3-1/4" (82mm)	Brass
E16-4021	1" NPS	1-3/8" (35mm)	2" (51mm)	3-1/4" (82mm)	Brass N.P.
E16-4030	1" NPS	1-3/8" (35mm)	2" (51mm)	4" (102mm)	Brass
E16-4031	1" NPS	1-3/8" (35mm)	2" (51mm)	4" (102mm)	Brass N.P.
E16-4050	1-1/2" NPS	2" (51mm)	3" (76mm)	1-1/2" (38mm)	Brass
E16-4051	1-1/2" NPS	2" (51mm)	3" (76mm)	1-1/2" (38mm)	Brass N.P.
E16-4055	1-1/2" NPS	2" (51mm)	3" (76mm)	3" (76mm)	Brass
E16-4056	1-1/2" NPS	2" (51mm)	3" (76mm)	3" (76mm)	Brass N.P.
E16-4060	2"NPS*	2-1/2" (65mm)	3-1/2" (89mm)	2" (51mm)	Brass
E16-4061	2"NPS*	2-1/2" (65mm)	3-1/2" (89mm)	2" (51mm)	Brass N.P.

Note: + = Gray ABS Thermoplastic
*2" (51mm) drains are furnished with locknut and washer.

Brass and Rubber Stoppers for 1" and 1-1/2" NPS Drains

Model	Size	Material
E60-4081	1" NPS	Brass
E60-4082	1" NPS	Brass N.P.
E60-4083	1" NPS	Rubber
E60-4085	1-1/2" NPS	Brass N.P.
E60-4088	1-1/2" NPS	Brass

Stainless Steel Strainer for 3/4" (19mm) Sink Drain

Model	E16-4200

Washers and Locknuts

Washers and Locknuts for 1", 1-1/2" and 2" NPS Drains

Model	Size	Model	Size	Model	Size
Rubber Washers		Flanged Brass Locknuts		Flanged Locknuts Zinc	
E01-4090	1" NPS	E02-4090-BR	1" NPS	E02-4090	1" NPS
E01-4091	1-1/2" NPS	E02-4091-BR	1-1/2" NPS	E02-4091	1-1/2" NPS
E01-4092	2" NPS			E02-4092	2" NPS

OVERFLOW TUBES, NIPPLES & COUPLINGS

Encore® Overflow Tubes, Nipples and Cou-

OVERFLOW TUBES

Brass Overflow Tubes 1" and 1-1/2" NPS Drains			
Model	**Size**	**Length**	**Seat Material**
E15-0222*	1" NPS	7" (178 mm)	PVC
E15-0220*	1" NPS	9" (229 mm)	PVC
E15-0240**	1-1/2" NPS	7-1/2" (190mm)	PVC
E15-0242**	1-1/2" NPS	10" (254mm)	PVC
E15-0244**	1-1/2" NPS	12" (305mm)	PVC

Notes:
*E15-0220 and E15-0222 are furnished with overflow strainer
**Will only fit Model No. E18-1822 stainless steel drain

Stainless Steel Overflow Tubes 1" and 1-1/2" NPS Drains			
Model	**Size**	**Length**	**Seat Material**
E13-0240	1-1/2" NPS	7-1/2" (190mm)	Swedged
E13-0242	1-1/2" NPS	10" (254mm)	Swedged
E13-0244	1-1/2" NPS	12" (305mm)	Swedged

Notes:
All E13 series overflow tubes will only fit Model No. E18-1822 Stainless steel drain

NIPPLES AND COUPLINGS

Type 304 Stainless Steel, Schedule 40	
Model	**Size**
E19-0383	3/8" NPT x 3" (76mm)
E19-0384	3/8" NPT x 4" (102mm)
E19-0386	3/8" NPT x 6" (152mm)
E19-0123	1/2" NPT x 3" (76mm)
E19-0124	1/2" NPT x 4" (102mm)
E19-0126	1/2" NPT x 6" (152mm)
E19-0344	3/4" NPT x 4" (102mm)
E19-0346	3/4" NPT x 6" (152mm)
E19-0348	3/4" NPT x 8" (203mm)
E19-1003	1" NPT x 3" (76mm)
E19-1004	1" NPT x 4" (102mm)
E19-1006	1" NPT x 6" (152mm)
E19-1008	1" NPT x 8" (203mm)
E19-1123	1-1/2" NPT x 3" (76mm)
E19-1124	1-1/2" NPT x 4" (102mm)
E19-1126	1-1/2" NPT x 6" (152mm)
E19-2003	2" NPT x 3" (76mm)
E19-2004	2" NPT x 4" (102mm)
E19-1000	1" (25mm) Nipple Strainer

COUPLINGS

Type 304 Stainless Steel, Schedule 40	
Model	**Size**
E20-0380	3/8" NPT
E20-0120	1/2" NPT
E20-0340	3/4" NPT
E20-1000	1" NPT
E20-1120	1-1/2" NPT
E20-2000	2" NPT

DRAINS

Encore® Overflow Drains and Components

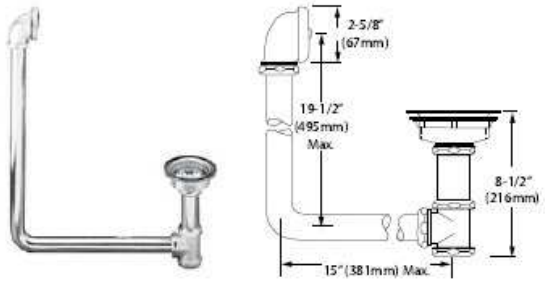

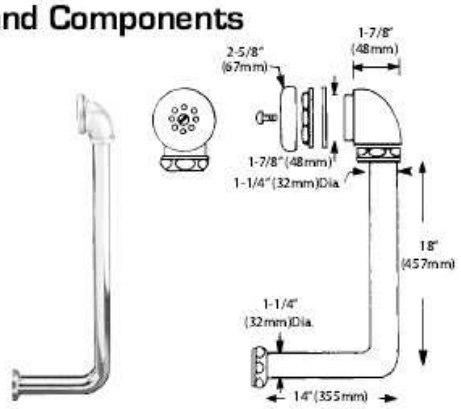

Stainless Steel Duo Basket Drains with Overflow Assembly			
Model	**Sink Opening**	**NPS**	**Face Flange Dia**
E40-4890	3-1/2" (89mm)	1-1/2"	4-1/2" (114mm)
E40-4895*	3-1/2"(89mm)	1-1/2"	4-1/2" (114mm)

Note: Furnished with overflow, brass tubing, "T" joint, coupling nuts, gaskets and sealing washers.
* Type 18-8 stainless steel

Optional Overflow Assembly for Lever, Twist & Rotary Drains	
Model	E50-1000

- Brass nickel plated w/stainless steel faceplate
- Brass nickel plated elbow 1-1/4" (32mm) O.D. tubing
- 1-5/16" (49mm) Dia. opening required slip fit for 1-1/4" (32mm) O.D. tubing

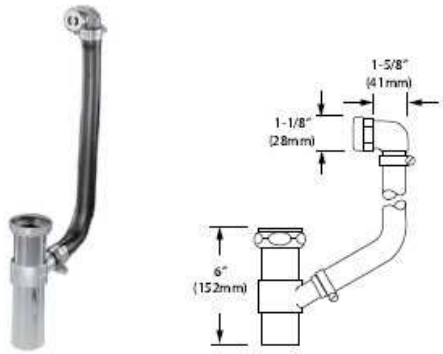

Optional Overflow Assembly for 1-1/2" (38mm) Drains	
Model	E51-1000

For use with lever/twist handle drains, basket drains and sink drains

- Rubber O-ring • Economical • Easy installation
- Eliminates overflow tubes • Maximizes sink space

Overflow consists of nickel plated brass branch tailpiece sub assembly, (2) stainless steel clamps, 32" (815mm) long rubber hose and chrome plated ABS overflow head. 7/8 hole punch for overflow.

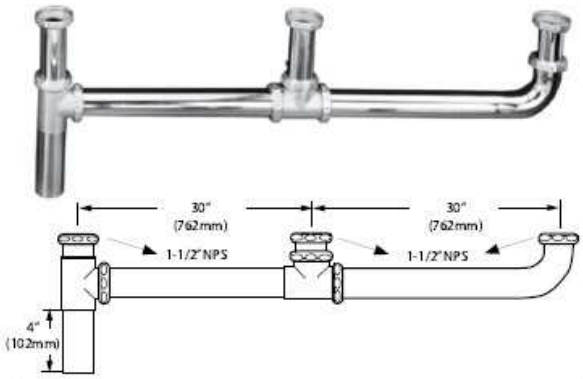

Universal Continuous Waste	
Model	E30-7703

- Chrome plated brass • End outlet, 3 compartment

Overflow Head Assembly for Mini Lever Drain	
Model	E50-1010

TAILPIECE ASSEMBLIES

Brass and Nickel Plated Brass for 1-1/2" (38mm) and 2" (51mm) Drains			
Model	**Size**	**Length**	**Material**
E22-4070	1" NPS	2" (51mm)	Brass
E22-4071	1" NPS	2" (51mm)	Brass N.P.
E22-4120	1-1/2" NPS	4" (102mm)	Brass
E22-4121	1-1/2" NPS	4" (102mm)	Brass N.P.
E22-4130	2" NPS	4" (102mm)	Brass
E22-4131	2" NPS	4" (102mm)	Brass N.P.

Note: All tailpieces are furnished with gasket and slipnut.