RONDA
OUTDOORS
KITCHEN COMPONENTS

MADE IN ITALY

OUTDOOR KITCHEN COMPONENTS

ITALIAN DESIGN FOR AN AMERICAN WAY OF LIFE. FOR A COOL BARBECUE.

You never turn down an invitation to a barbecue, now you have the opportunity to make your outdoor barbecue area even more beautiful, original and practical. Ronda outdoor kitchen components gives you the maximum guaranteed protection to external elements such as temperature (-2°/+140°f) and bacterial agents thanks to the quality of the stainless steel, together with the style and the great quality of the Made in Italy by Ronda, the world leader in designing and producing stainless steel components for the café/restaurant and food industries.

RONDA
OUTDOORS
KITCHEN COMPONENTS
MADE IN ITALY

THE ITALIAN DRAWER
Have it Hot or Keep Cool

THE ITALIAN DRAWER YOUR NEXT WARMING DRAWER

HOT

HAVE YOUR FOOD STAY WARM

STOP SERVING COLD FOOD, OUR INSULATION AND MAGNETIC SEAL KEEPS THE HEAT INSIDE.

NSF®

eco RONDA ECOLOGY WORLD

THE ITALIAN DRAWER
Have it Hot or Keep Cool

THE ITALIAN DRAWER
YOUR NEXT OUTDOOR FRIDGE

COLD

KEEP IT COLD AS LONG AS YOU NEED

OUR DRAWER KEEPS YOUR FOOD AND DRINKS COLD WITHOUT THE NEED OF ELECTRICITY. GO GREEN TODAY.

Ronda Outdoors presents "THE ITALIAN DRAWER", an innovative system that revolutionizes the BBQ world. Thanks to the insulating system, the magnetic seal and the use of specially designed and patented materials, The Italian Drawer is able to keep the temperature as long as you need. The magnetic seal avoids dust and unwelcome intruders.

NSF

eco
RONDA ECOLOGY WORLD

RONDA OUTDOORS
KITCHEN COMPONENTS

MADE IN ITALY

THE ITALIAN DRAWER

Long-lasting cold

COLD

LONG-LASTING COLD

MAGNETIC SEAL

EASY TO USE

THANKS TO THE DOUBLE CONTAINER THAT KEEPS COLD TEMPERATURE ALSO IN THE LOWER DRAWER

NO DUST NO BUGS WATERPROOF

THANKS TO THE MAGNETIC SEAL ON THE DRAWER FRONT

TOTAL HYGIENE

THANKS TO THE SPILLPROOF LIDS WITH GASKET ENSURING MAXIMUM FOOD HYGIENE

QM19

INSULATING SHELL

AND DRAWER SUPPORTING STRUCTURE

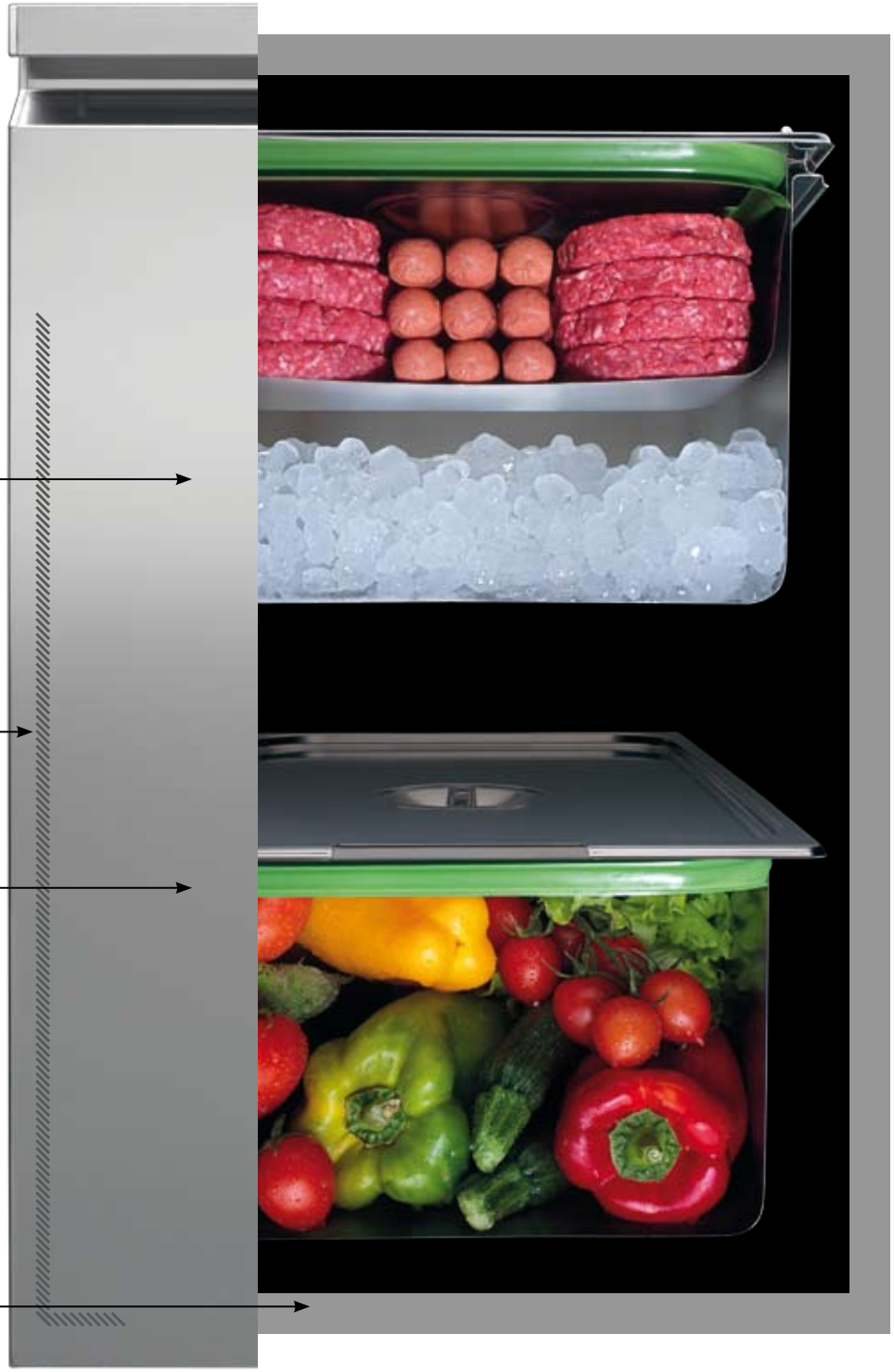

THE ITALIAN DRAWER

A unique system that also guarantees heat

HOT

KEEPS YOUR COOKED FOOD AT A WARM TEMPERATURE

MAGNETIC SEAL

EASY TO USE

THANKS TO THE DOUBLE CONTAINER HOLDING HOT WATER THAT KEEPS THE COOKED FOOD AT A WARM TEMPERATURE

NO DUST NO BUGS WATERPROOF

THANKS TO THE MAGNETIC SEAL ON THE DRAWER FRONT

TOTAL HYGIENE

THANKS TO THE SPILLPROOF LIDS WITH GASKET ENSURING MAXIMUM FOOD HYGIENE

QM11

INSULATING SHELL

AND DRAWER SUPPORTING STRUCTURE

THE ITALIAN
DRAWER
Have it Hot or Keep Cool

THE ITALIAN DRAWER, NO SMELL, NO UNWELCOME INTRUDERS

eco
RONDA ECOLOGY WORLD

TRASH
CONTAINER

MAGNETIC SEAL

PLASTIC INSIDE CONTAINER

PLASTIC INSIDE CONTAINER FOR TRASH EQUIPPED WITH HANDLE FOR EASY EMPTYING

NO DUST NO BUGS WATERPROOF

THANKS TO THE MAGNETIC SEAL ON THE DRAWER FRONT

STABILIZING SUPPORT

THAT PREVENTS OCCASIONAL OVERTURNING OF THE CONTAINER

QU211

INSULATING SHELL

AND DRAWER SUPPORTING STRUCTURE

RONDA OUTDOORS
KITCHEN COMPONENTS

MADE IN ITALY

THE ITALIAN DRAWER
EASY TAKE OUT
Tested for more than 80.000 cycles

MAINTENANCE-FREE
top-quality materials for long life

HYGIENE
simple forms for simple cleaning

ROBUST
a perfect balance between
loading capacity and durability

NSF CERTIFICATION
making the world its market

NSF®

ITALIAN DESIGN, QUALITY, MODULARITY AND INTERNATIONAL STANDARDS

The drawer can hold any food container, from the 1/1 size up

RONDA
OUTDOORS
KITCHEN COMPONENTS
MADE IN ITALY
rondaoutdoors.com

THE ITALIAN DRAWER
DETAILS THAT MAKE THE DIFFERENCE

Rubber Bumper Pads

Mechanically
Inserted Pin

Micro-Roller
Runner System

High-Resistance Acetal Resin
Roller With Quick Switch System

RONDA
OUTDOORS
KITCHEN COMPONENTS

MADE IN ITALY

THE ITALIAN DRAWER
INSULATED COMPONENTS

INSULATED SINGLE DRAWERS

Enclosed single drawers with insulated front, watertight inside box and full length tracks completely made of AISI 304 Stainless Steel. External shell in composite material. Hermetic closure granted by a magnetic gasket.

QK11

INSULATED DOUBLE DRAWER UNITS

Enclosed drawer units with two independent insulated fronts, two watertight inside boxes and full length tracks completely made of AISI 304 Stainless Steel. External shell in composite material. Hermetic closure granted by a magnetic gasket.

QM11

INSULATED DOUBLE DRAWER UNITS WITH ONE SINGLE FRONT

Enclosed drawer units with one single insulated front, two watertight inside boxes and full length tracks completely made of AISI 304 Stainless Steel. External shell in composite material. Hermetic closure granted by a magnetic gasket.

QM19

TOTAL HYGIENE AND SAFETY

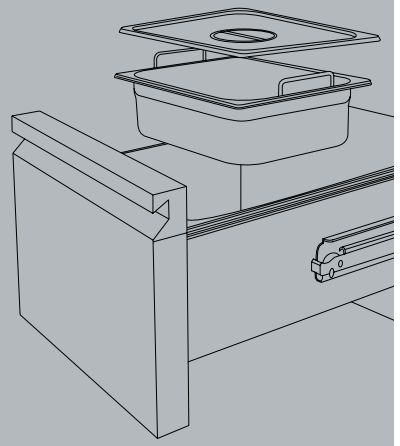

The insulated drawers are only meant to store ice and/or bottled refreshments.

Foodstuffs must be placed in food containers and sealed with a lid before being stored in the drawers.

INSULATED SINGLE DRAWERS QK11

QK11

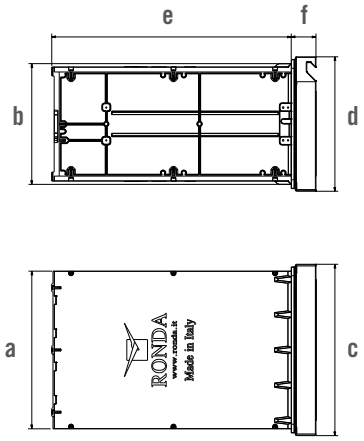

Model	Opening		External and internal size				Gross weight	
QK11	a	b	c	d	e	f		
mm	380	291	413	324	577,5	59,5	Kg	18,10
inch.	15”	11½”	16¼”	12¾”	22 23/32”	2 11/32”	Lbs	40,00

INSULATED DOUBLE DRAWER UNITS QM11

QM11

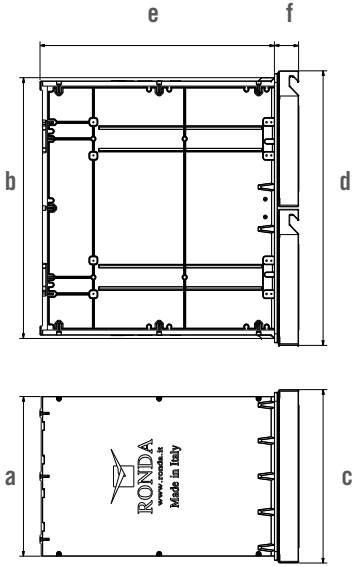

Model	Opening		External and internal size				Gross weight	
QM11	a	b	c	d	e	f		
mm	380	621	413	654	577,5	59,5	Kg	31,40
inch.	15”	24½”	16¼”	25¾”	22 23/32”	2 11/32”	Lbs	69,30

INSULATED DOUBLE DRAWER UNITS WITH ONE SINGLE FRONT QM19

QM19

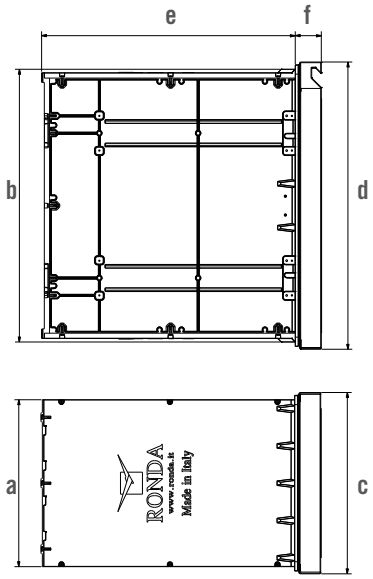

Model	Opening		External and internal size				Gross weight	
QM19	a	b	c	d	e	f		
mm	380	621	413	654	577,5	59,5	Kg	30,10
inch.	15”	24½”	16¼”	25¾”	22 23/32”	2 11/32”	Lbs	66,40

Legend

a/b: opening
c/d: dimensions of the drawer front
e: total depth of the item from the counter front
f: external projection from the counter front

1

2

3

4

TOTAL HYGIENE AND SAFETY

The insulated drawers are only meant to store ice and/or bottled refreshments.

Foodstuffs must be placed in food containers and sealed with a lid before being stored in the drawers.

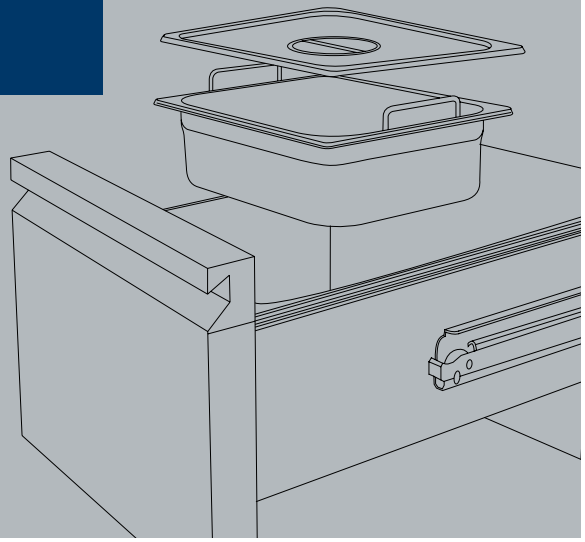

1 4 The drawer inside box is watertight and can be filled with ice or warm water. This keeps bottled beverages & food containers at the ideal temperature (hot or cold).

2 The shape and size of the drawer box are specially studied to fit any composition of standard food containers & lids.

3 All corners & edges are rounded to allow safe and easy cleaning.

RONDA
OUTDOORS
KITCHEN COMPONENTS
MADE IN ITALY

TRASH CONTAINER
SPECIAL COMPONENTS

PULL-OUT
TRASH DRAWERS

Enclosed drawers with front, watertight inside box and full length tracks completely made of AISI 304 Stainless Steel. External shell in composite material. Hermetic closure granted by a magnetic gasket. Equipped with two plastic trash containers with handles.

PULL-OUT TRASH DRAWER

QU21I

QU21I

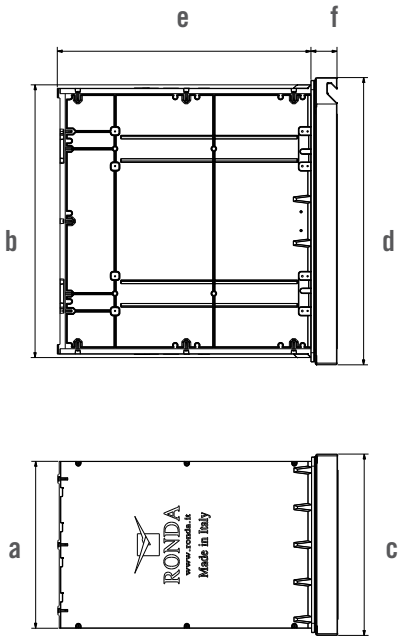

Legend

a/ b: opening
c/d: dimensions of the drawer front
e: total depth of the item from the counter front
f: external projection from the counter front

Model	Opening		External and internal size				Gross weight	
QU21I	a	b	c	d	e	f		
mm	380	621	413	654	577,5	59,5	Kg	26,00
inch.	15”	24½”	16¼”	25¾”	22 23/32”	2 11/32”	Lbs	57,40

RONDA
OUTDOORS
KITCHEN COMPONENTS

MADE IN ITALY

BASIC COMPONENTS

BASIC SINGLE DRAWERS

Single drawers with front, drawer box and self-supporting structure completely made of AISI 304 stainless steel. Hermetic closure granted by a magnetic gasket. Specially designed to store BBQ utensils and canned/packed food.

QK21

BASIC DOUBLE DRAWER UNITS

Drawer units with two identical fronts, two drawer boxes and self-supporting structure completely made of AISI 304 stainless steel. Hermetic closure granted by a magnetic gasket. Specially designed to store BBQ utensils and canned/packed food.

QM21

BASIC TRIPLE DRAWER UNITS

Drawer units with three fronts, three drawer boxes and self-supporting structure completely made of AISI 304 stainless steel. Hermetic closure granted by a magnetic gasket. Specially designed to store BBQ utensils and canned/packed food.

QR21

BASIC SINGLE DOORS

Single doors completely made of AISI 304 Stainless Steel, equipped with angular hinges either for right or left opening. Hermetic closure granted by a magnetic gasket.

QX21D/QX21S

BASIC DOUBLE DOORS

Double doors completely made of AISI 304 Stainless Steel, equipped with angular hinges and 1 single magnetic gasket to grant hermetic closure.

QL21/QL22

BASIC SINGLE DRAWERS QK21

QK21

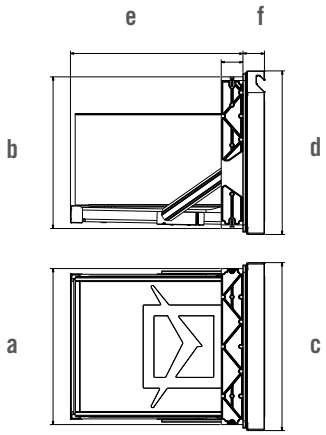

Model	Opening		External and internal size				Gross weight	
QK21	a	b	c	d	e	f		
mm	431	419	464	452	477	59,5	Kg	13,00
inch.	17”	16½”	18 9/32”	17 13/16”	18 25/32”	2 11/32”	Lbs	28,70

BASIC DOUBLE DRAWER UNITS QM21

QM21

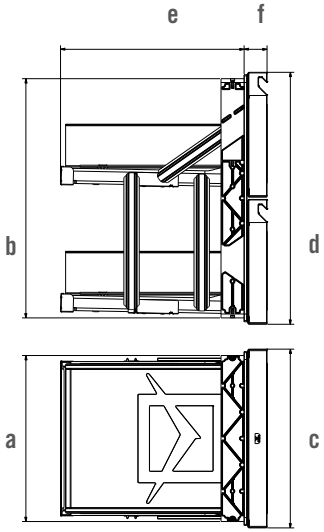

Model	Opening		External and internal size				Gross weight	
QM21	a	b	c	d	e	f		
mm	431	621	464	654	477	59,5	Kg	18,80
inch.	17”	24½”	18 9/32”	25¾”	18 25/32”	2 11/32”	Lbs	41,50

BASIC TRIPLE DRAWER UNITS QR21

QR21

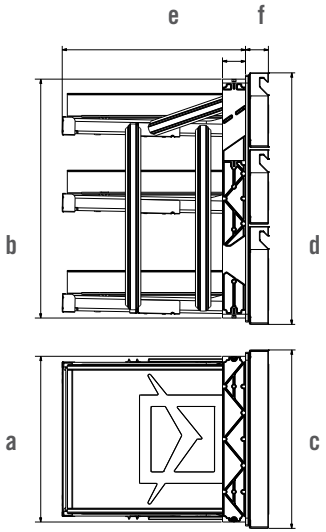

Model	Opening		External and internal size				Gross weight	
QR21	a	b	c	d	e	f		
mm	431	621	464	654	477	59,5	Kg	22,30
inch.	17”	24½”	18 9/32”	25¾”	18 25/32”	2 11/32”	Lbs	49,20

Legend

a/b: opening
c/d: dimensions of the drawer front
e: total depth of the item from the counter front
f: external projection from the counter front

BASIC COMPONENTS

BASIC SINGLE DOORS — QX21D QX21S

QX21D
QX21S

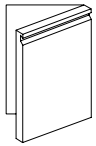

QX21D
Right-hand opening

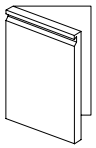

QX21S
Left-hand opening

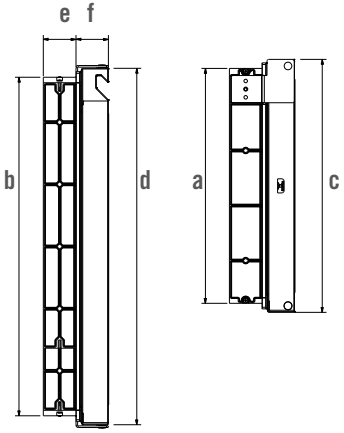

Model	Opening		External and internal size				Gross weight	
QX21D	a	b	c	d	e	f		
mm	431	621	464	654	60	59,5	Kg	9,20
inch.	17”	24½”	18 9/32”	25¾”	2⅜”	2 11/32”	Lbs	20,30
QX21S	a	b	c	d	e	f		
mm	431	621	464	654	60	59,5	Kg	9,20
inch.	17”	24½”	18 9/32”	25¾”	2⅜”	2 11/32”	Lbs	20,30

BASIC DOUBLE DOORS — QL21 QL22

QL21
QL22

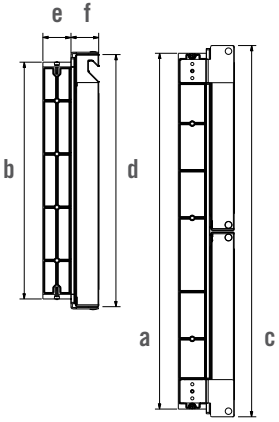

Model	Opening		External and internal size				Gross weight	
QL21	a	b	c	d	e	f		
mm	762	507	795	540	60	59,5	Kg	13,80
inch.	30”	20”	31 5/16”	21¼”	2⅜”	2 11/32”	Lbs	30,50
QL22	a	b	c	d	e	f		
mm	863	507	896	540	60	59,5	Kg	14,60
inch.	34”	20”	35 9/32”	21¼”	2⅜”	2 11/32”	Lbs	32,20

RONDA
OUTDOORS
KITCHEN COMPONENTS
MADE IN ITALY

ACCESSORIES

FOOD CONTAINERS WITH HANDLES

Standard food containers completely made of AISI 304 Stainless Steel, in compliance with the UNI EN 631-1 and the UE 1935/2004 Directive for food use.
Available in different sizes.
Equipped with handles to be easily inserted into the drawers.
We recommend to use food containers in combination with their own lids.

GNA

LIDS NOTCHED FOR HANDLES

Standard food lids completely made of AISI 304 Stainless Steel, in compliance with the UNI EN 631-1 and the UE 1935/2004 Directive for food use.
They are notched be used with handled food containers.
Available in different sizes to fit the food containers.

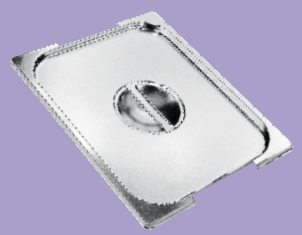

GNK

SPILLPROOF LIDS NOTCHED FOR HANDLES

Standard food lids completely made of AISI 304 Stainless Steel, in compliance with the UNI EN 631-1 and the UE 1935/2004 Directive for food use.
They are notched to be used with handled food containers and equipped with a silicon seal to avoid spilling when the containers are filled with liquids.
Available in different sizes to fit the food containers.

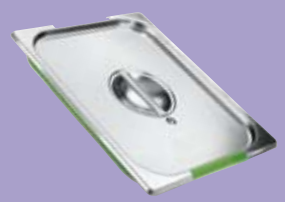

GNX

ROUND SINKS

Standard round sink can be top mounted, made of AISI 304 Stainless Steel and equipped with waste pipe.

VRI

SQUARE SINKS

Standard square sink can be mounted, made of AISI 304 Stainless Steel and equipped with waste pipe.

VDI

FOOD CONTAINERS WITH HANDLES — GNA

GNA

Model	Depth h mm	Depth h inch	External size a x b mm	External size a x b inch	Internal size c x d mm	Internal size c x d inch	Capacity Lt.	Capacity Gal.	Box
GNA 1106	65	2 9/16"	530x325	20 7/8"x12 13/16"	505x300	19 7/8"x11 13/16"	9	2,37	10
GNA 1110	100	4"	530x325	20 7/8"x12 13/16"	505x300	19 7/8"x11 13/16"	14	3,69	10
GNA 1120	200	8"	530x325	20 7/8"x12 13/16"	505x300	19 7/8"x11 13/16"	28	7,39	5
GNA 1206	65	2 9/16"	325x265	12 13/16"x10 7/16"	300x240	11 13/16"x9 7/16"	4	1,05	10
GNA 1210	100	4"	325x265	12 13/16"x10 7/16"	300x240	11 13/16"x9 7/16"	6,5	1,71	10
GNA 1220	200	8"	325x265	12 13/16"x10 7/16"	300x240	11 13/16"x9 7/16"	12,5	3,17	10
GNA 1306	65	2 9/16"	325x176	12 13/16"x6 15/16"	300x151	11 13/16"x5 15/16"	2,5	0,52	10
GNA 1310	100	4"	325x176	12 13/16"x6 15/16"	300x151	11 13/16"x5 15/16"	4	1,05	10
GNA 2806	65	2 9/16"	325x132	12 13/16"x5 3/16"	300x107	11 13/16"x4 7/32"	1,5	0,26	10
GNA 2810	100	4"	325x132	12 13/16"x5 3/16"	300x107	11 13/16"x4 7/32"	2,7	0,53	10

1/1
530 x 325 mm
20 7/8" x 12 13/16"

1/2
325 x 265 mm
12 13/16" x 10 7/16"

1/3
325 x 176 mm
12 13/16" x 6 15/16"

2/8
325 x 132 mm
12 13/16" x 5 3/16"

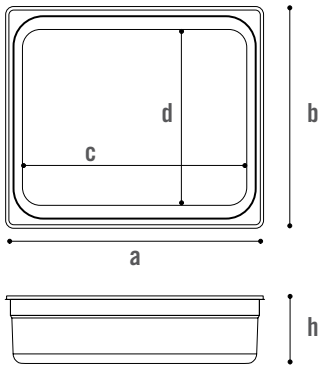

LIDS NOTCHED FOR HANDLES — GNK

GNK

Model	External size a x b mm	External size a x b inch	Box
1/1 **GNK** 11	530x325	20 7/8"x12 13/16"	10
1/2 **GNK** 12	325x265	12 13/16"x10 7/16"	10
1/3 **GNK** 13	325x176	12 13/16"x6 15/16"	20
2/8 **GNK** 28	325x132	12 13/16"x5 3/16"	20

1/1
530 x 325 mm
20 7/8" x 12 13/16"

1/2
325 x 265 mm
12 13/16" x 10 7/16"

1/3
325 x 176 mm
12 13/16" x 6 15/16"

2/8
325 x 132 mm
12 13/16" x 5 3/16"

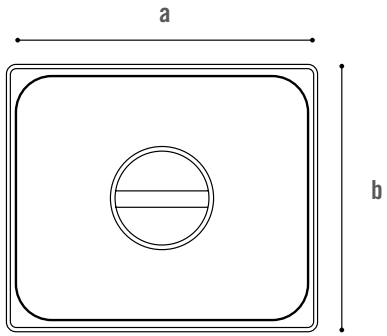

SPILLPROOF LIDS NOTCHED FOR HANDLES — GNX

GNX

Model	External size a x b mm	External size a x b inch	Box
1/1 **GNX** 11	530x325	20 7/8"x12 13/16"	10
1/2 **GNX** 12	325x265	12 13/16"x10 7/16"	10
1/3 **GNX** 13	325x176	12 13/16"x6 15/16"	20

1/1
530 x 325 mm
20 7/8" x 12 13/16"

1/2
325 x 265 mm
12 13/16" x 10 7/16"

1/3
325 x 176 mm
12 13/16" x 6 15/16"

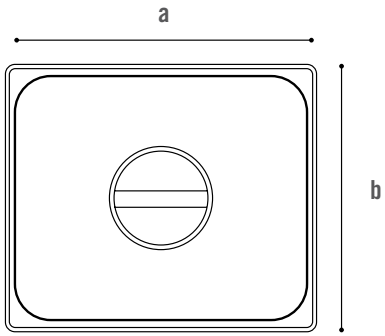

ROUND SINKS VRI

VRI

Model	Opening	External and internal size						Capacity		Box
VRI38	a (ø)	c (ø)	e	f (ø)	g	h	i			
mm	382	380	84	1½"	45	164	27	Lt.	16,5	5
inch.	15 1/32"	14 31/32"	3 5/16"		1 25/32"	6 15/32"	1 1/16"	Gallons	4,36	
VRI42	a (ø)	c (ø)	e	f (ø)	g	h	i			
mm	422	420	82	1½"	45	165	25	Lt.	21,5	5
inch.	16 5/8"	16 17/32"	3 7/32"		1 25/32"	6½"	0 31/32"	Gallons	5,68	

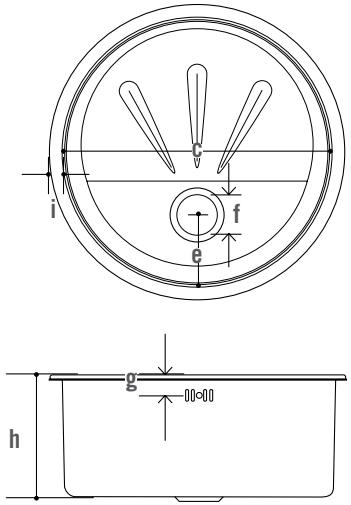

SQUARE SINKS VDI

VDI

Model	Opening		External and internal size									Capacity		Box
VDI40201D	a	b	c	d	e	f (ø)	g	h	i	r	ri			
mm	402	402	400	400	90	1½"	34	200	10	6	65	Lt.	25	5
inch.	15 27/32"	15 27/32"	15¾"	15¾"	3 17/32"		1 11/32"	7 7/8"	0 3/8"	0¼"	2 9/16"	Gallons	6,60	
VDI40201S	a	b	c	d	e	f (ø)	g	h	i	r	ri			
mm	402	402	400	400	90	1½"	34	200	10	6	65	Lt.	25	5
inch.	15 27/32"	15 27/32"	15¾"	15¾"	3 17/32"		1 11/32"	7 7/8"	0 3/8"	0¼"	2 9/16"	Gallons	6,60	

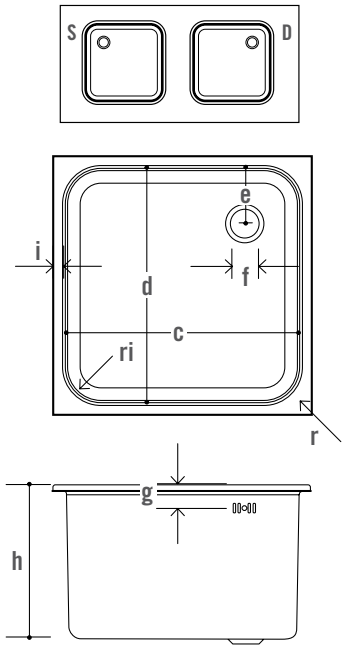

LOCK S7

Model	Description
ST	External lock to be fixed after installation

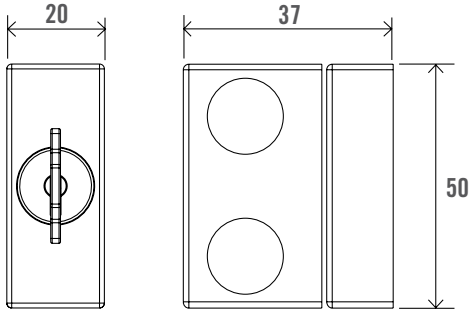

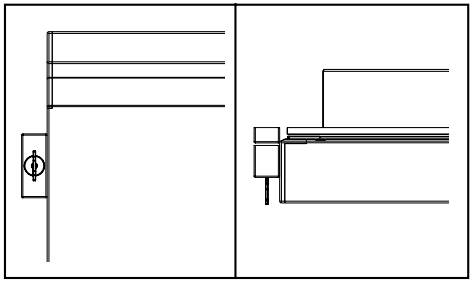

RONDA
STYLE THAT WORKS

PALLADIO, A GENIUS, RONDA A GENIAL COMPANY

Associating Ronda philosophy to the work of the worldwide famous renaissance architect Andrea Palladio, is not an odd choice but a calculated one.
Palladio's genius, a product of Venetian values and civilization along with creativity, dedication and a love of work, is represented in his daringly innovative work which, far from denying the past, recognizes the importance of it as an inspiring force.
Like his forms of absolute beauty and elegance, a result of a lively imagination, his techniques are impressive for their extraordinary constructive innovation and admirable balance. His most famous works, such as the villa la Rotunda, the basilica of Vicenza, the teatro Olimpico, the Venetian churches and many other villas, characterize his style and way of thinking.
Palladio influenced the world thinking through impeccable design and technological advancement: this is also paramount in Ronda philosophy.

rondaoutdoors.com

RONDA
STYLE THAT WORKS

MADE IN ITALY

Ronda Outdoors produced by:

Ronda S.p.A.
Via Vegri, 83
36010 Zané, Vicenza, Italy
Phone +39 0445 385600
Fax +39 0445 385700
www.ronda.it
sales@rondaoutdoors.com

Distributed in the USA by:

RONDA USA, Inc.
Sales Office
1507 - 7th Street #191
Santa Monica, CA 90401
Phone 1-310-746-5240
Tollfree 1-855-766-3287
Tollfree Fax 1-866-301-6636
www.rondaoutdoors.com
dahlborn@rondaoutdoors.com

RONDA is a proud member of:

HPBA®
Hearth, Patio & Barbecue Association

AMERICAN SOCIETY OF LANDSCAPE ARCHITECTS

keybusiness.com

BBQ ED.03/07/2011