PRIMA

IP66 230 V 50 Hz

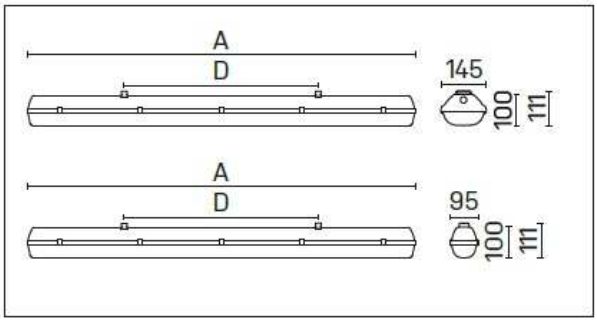

T5	T8	A [mm]	D [mm]
114/124	118	662	350
128/154	136	1272	700
135/149/180	158	1572	940
214/224	218	662	350
228/254	236	1272	700
235/249/280	258	1572	940

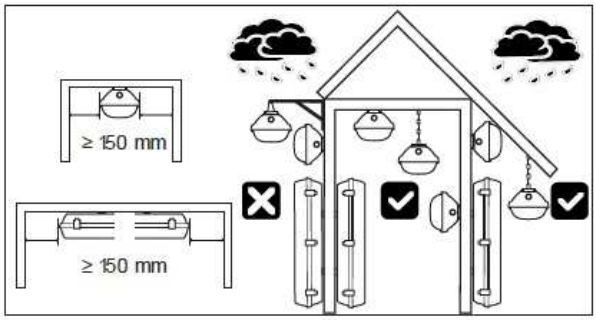

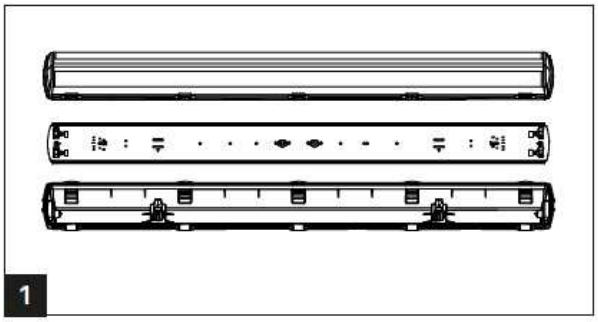

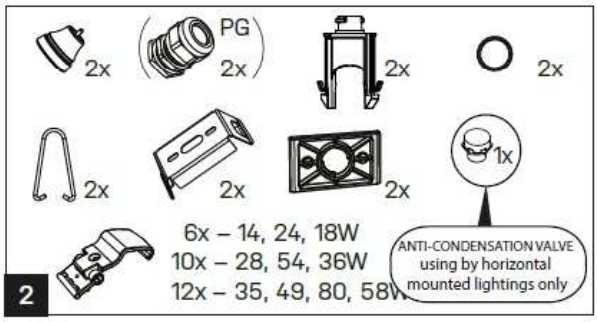

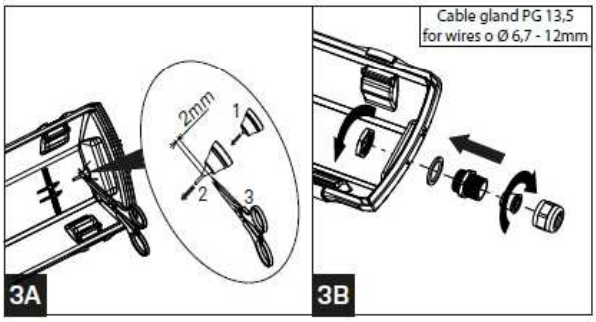

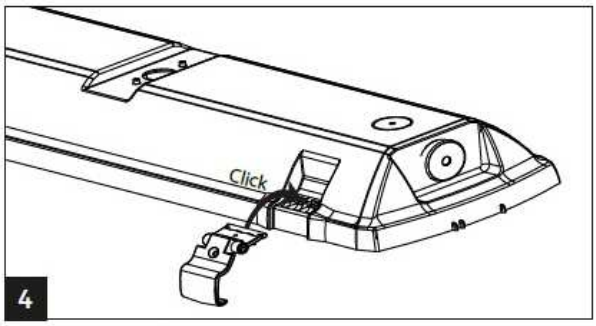

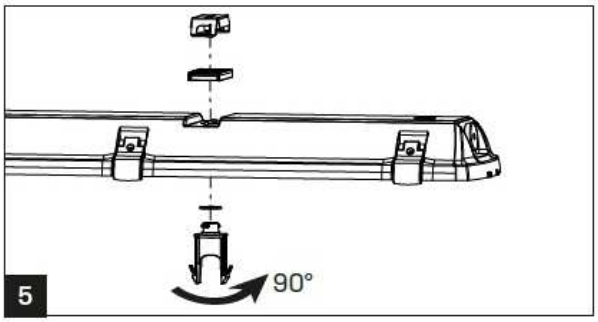

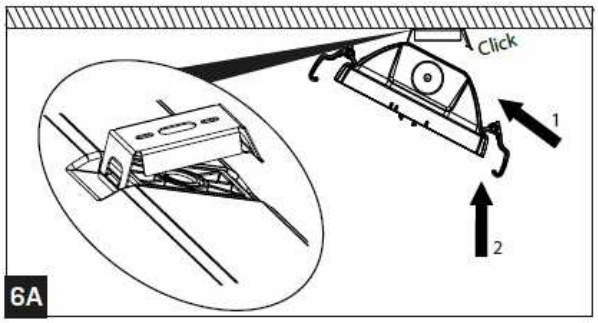

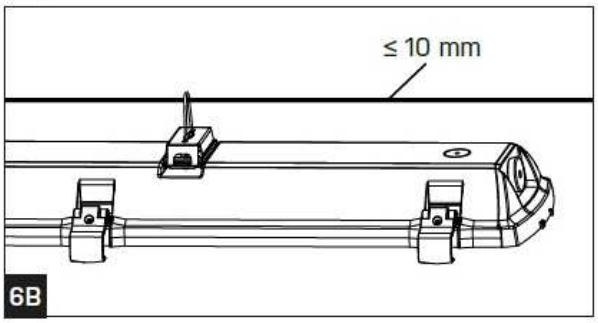

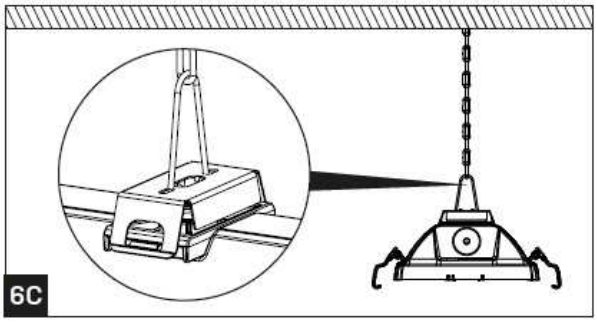

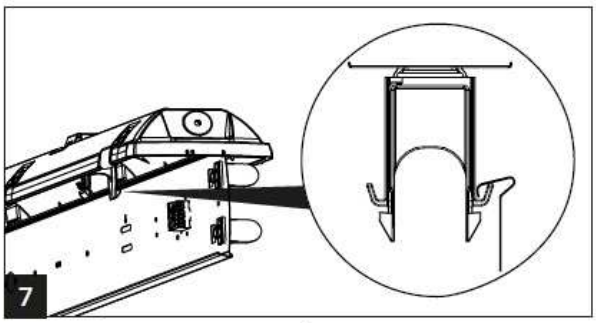

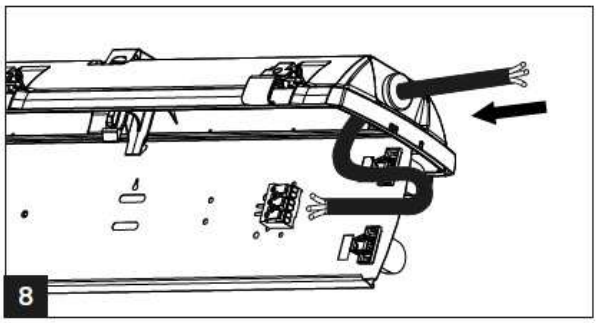

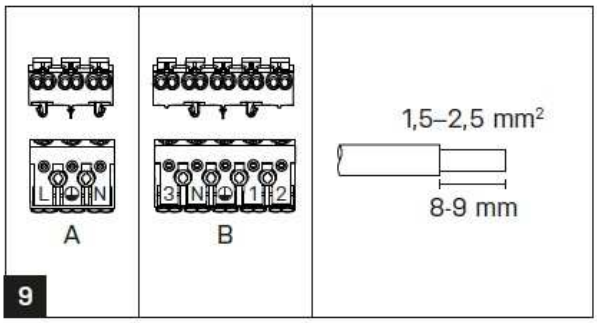

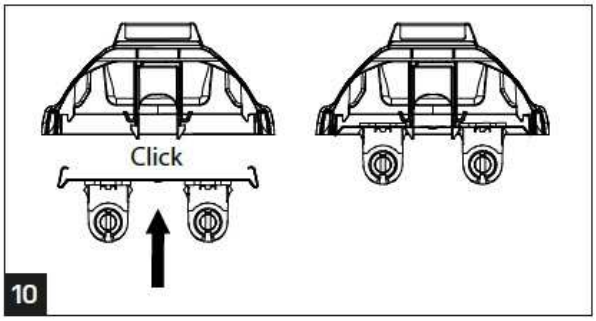

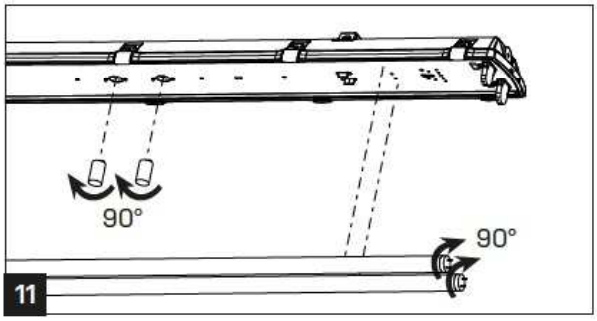

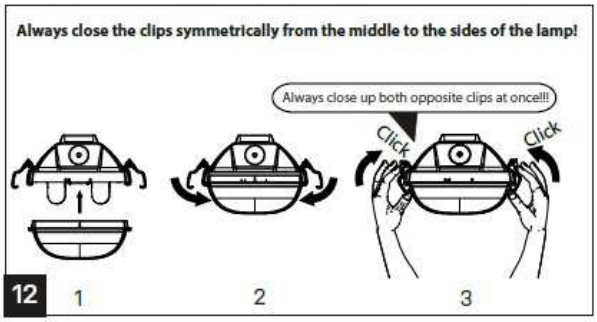

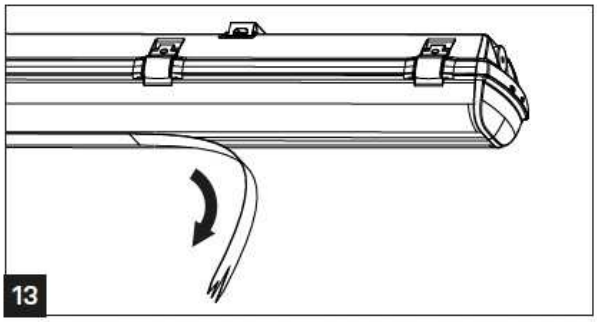

EN Installation can only be carried out by an authorized person and according to the mounting instructions. Any other installation is considered to be improper. For well installation and good luminaire work is necessary ensure a planarity of a mounting surface. Make sure that the luminaire is always disconnected from the power supply before the installation work. Do not use the luminaire if damaged or if damaged the power cable. Only damp microfiber cloth can be used for cleaning. Technical changes are subjected without notice. Do not dispose the luminaire or its parts as household waste, but make the proper recycling.