insertion middle profile

1

insert middle profile and push till the stop

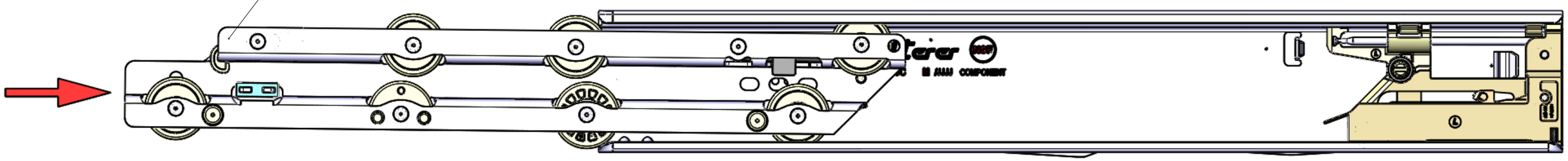

stop lever

B

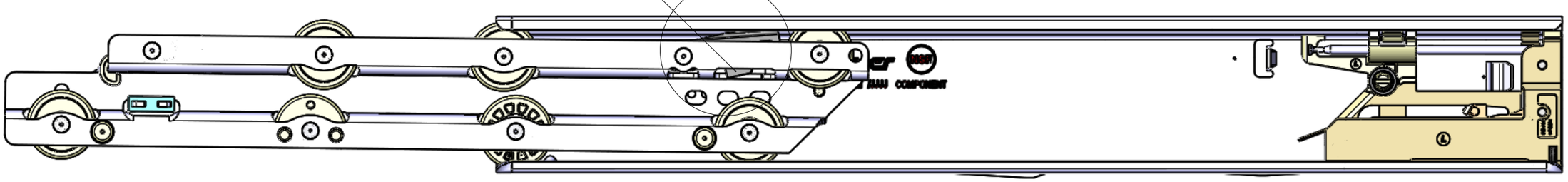

2

B

detail step 2

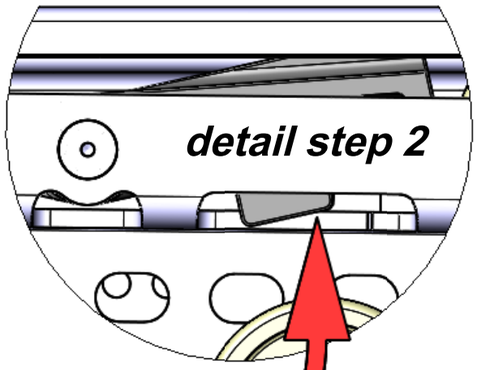

push stop lever up

3

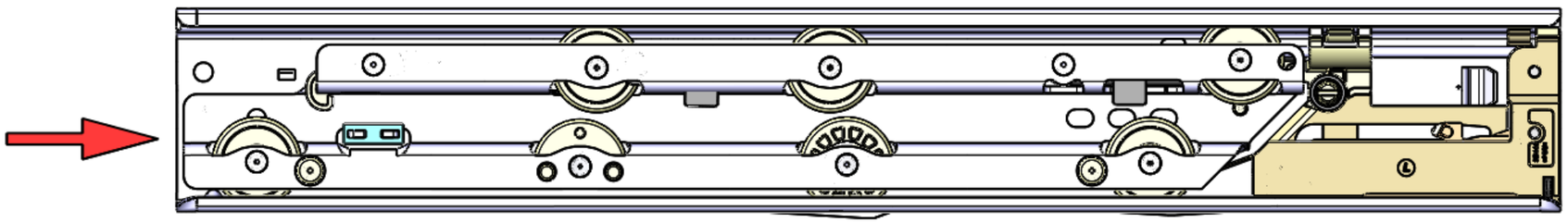

move the profil to the end position

insertion drawer profile

4

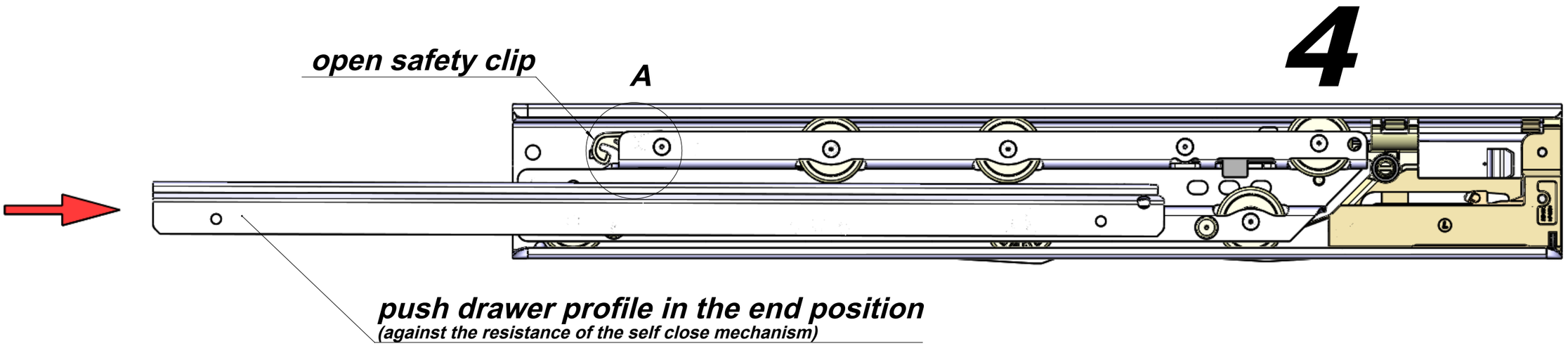
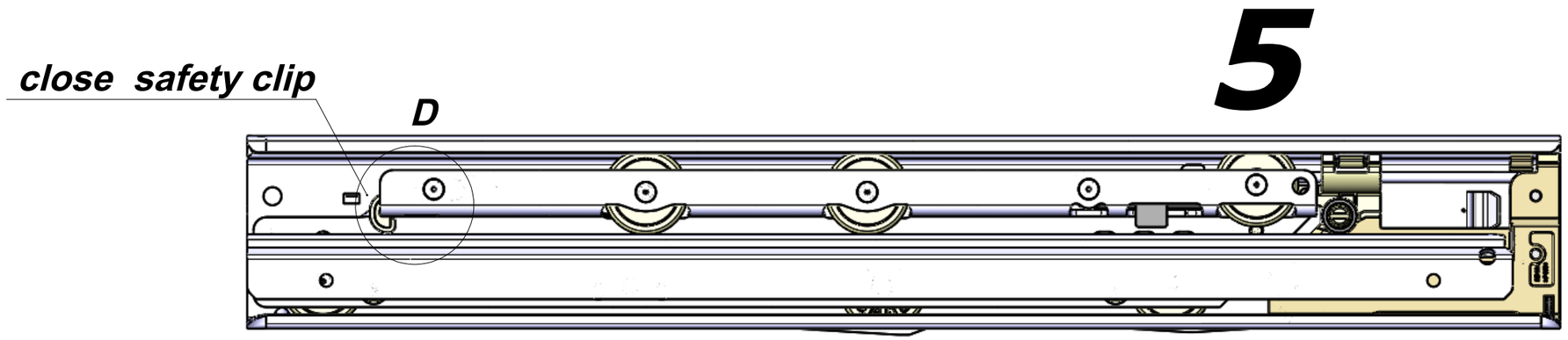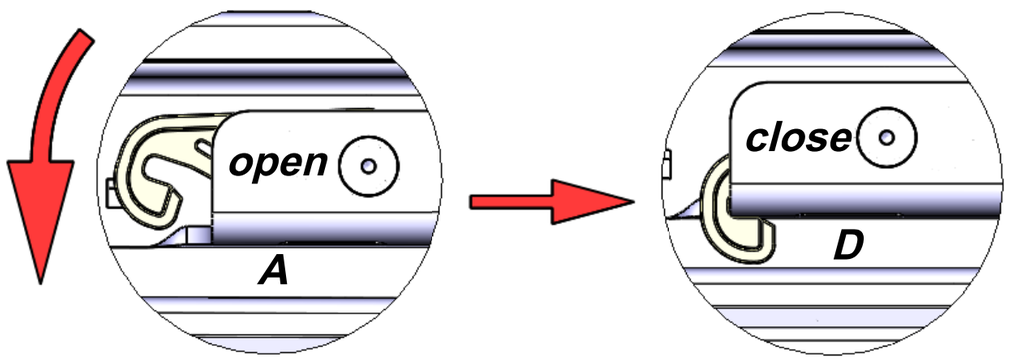
5